ELKAY®
SPECIFICATIONS

Elkay Single Hole with Single Control Faucet with 10" Arc Tube Spout 2" Lever Handle Chrome
Model(s) LK535AT10L2

PRODUCT SPECIFICATIONS

Elkay Single Hole with Single Control Faucet with 10" Arc Tube Spout 2" Lever Handle Chrome. Faucet has a flow rate of 1.5 GPM, and is made of Chrome Plated Brass material, with a Quarter Turn Ceramic Disc - Cold valve. Faucet requires 1 faucet holes.

Mounting Type:	Deck Mount
Special Features:	Low Flow Solid Brass Construction Spout swing restriction pin
Finish:	Chrome (CR)
Handle Type:	2" Lever Handle
Deck Clearance:	6-1/2"
Spout Reach:	10"
Spout Height:	9-1/8"
Hole Drillings:	1
Material:	Chrome Plated Brass
Valve Type:	Quarter Turn Ceramic Disc - Cold
Valve Connection:	1/2"-14 NPSM
Flow Rate:	1.5 GPM
Spout Type:	Arc Tube

Special Note: 1.5 GPM VR aerator installed with 2.2 and .5 GPM inserts included


Chrome
(CR)



AMERICAN PRIDE. A LIFETIME TRADITION.
Like your family, the Elkay family has values and traditions that endure. For almost a century, Elkay has been a family-owned and operated company, providing thousands of jobs that support our families and communities.

Product Compliance: ADA & ICC A117.1
ASME A112.18.1/CSA B125.1
NSF 61
NSF 372 (lead free)

Complies with ADA & ICC A117.1 accessibility requirements when installed according to the requirements outlined in these standards.

Clean and Care Manual (PDF)
Installation Instructions (PDF)
Limited Warranty (PDF)

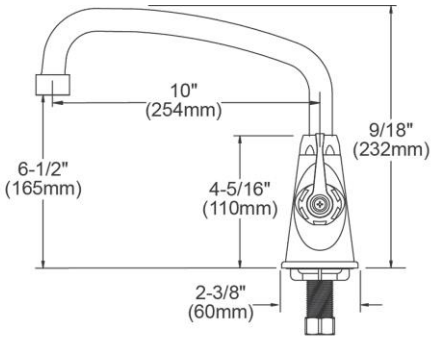

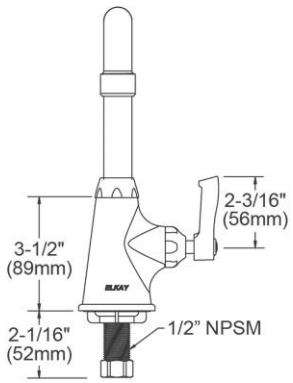

PART:_____QTY: _____
PROJECT:_____
CONTACT:_____
DATE:_____
NOTES:_____
APPROVAL:

In keeping with our policy of continuing product improvement, Elkay reserves the right to change product specifications without notice. Please visit elkay.com for the most current version of Elkay product specification sheets. This specification describes an Elkay product with design, quality, and functional benefits to the user. When making a comparison of other producers' offerings, be certain these features are not overlooked.

ELKAY®
SPECIFICATIONS

Elkay Single Hole with Single Control Faucet with 10" Arc Tube Spout 2" Lever Handle Chrome

Model(s) LK535AT10L2

ITEM	IND. PART	DESCRIPTION
1	A55395	Spout
2	45918C	Handle, 2"
3	45923C	Right Cold Cartridge
4	45927C	Body
5	LK734	2.2 GPM VR Aerator

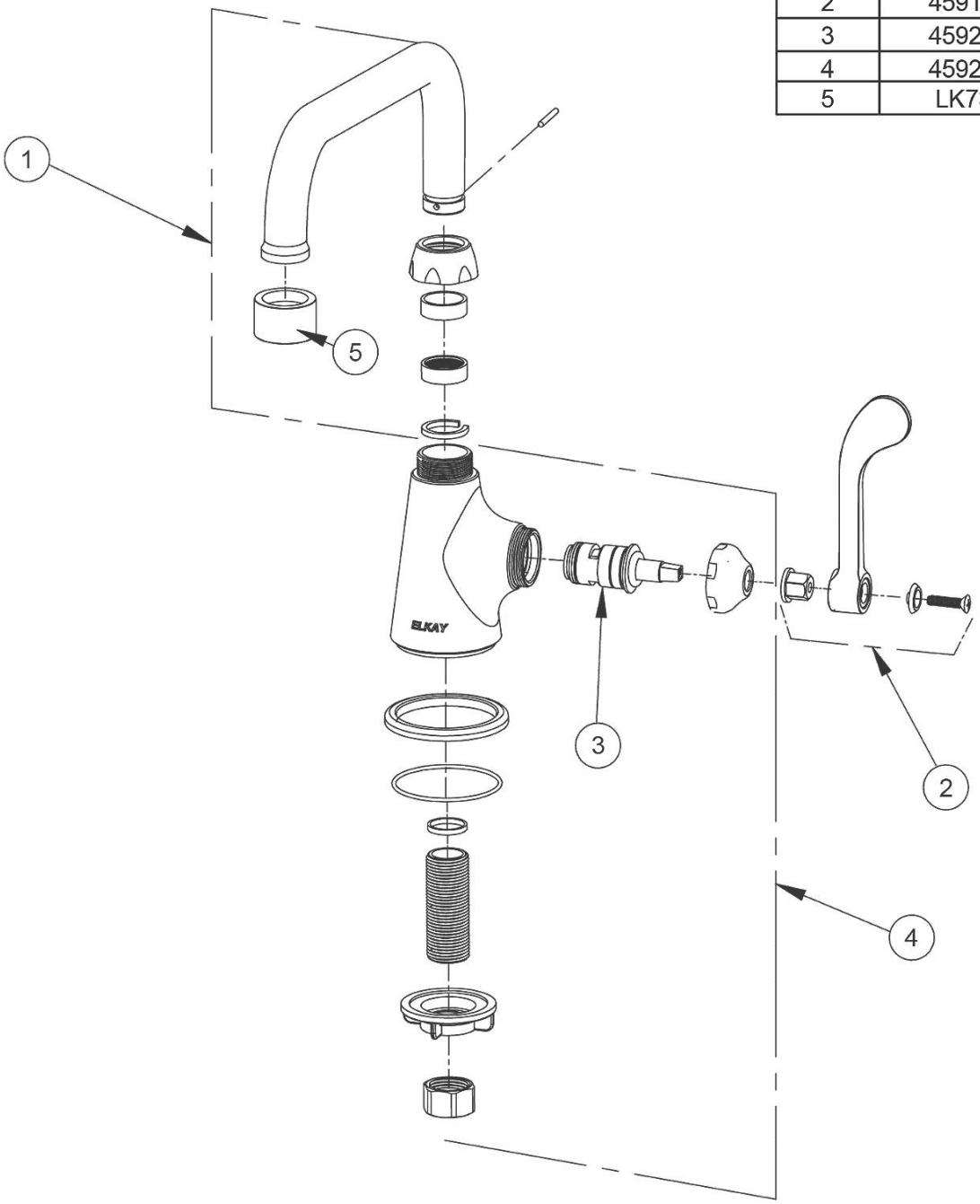

In keeping with our policy of continuing product improvement, Elkay reserves the right to change product specifications without notice. Please visit elkay.com for the most current version of Elkay product specification sheets. This specification describes an Elkay product with design, quality, and functional benefits to the user. When making a comparison of other producers' offerings, be certain these features are not overlooked.

© 2018