Halsey Taylor®

GreenSpec® LISTED
www.GreenSpec.com

Owners Manual

HTHBHVR8-NF, HTHBHVR8-NF-25, HTHBHVR8-NF-26 Factory Prep HydroBoost® Bottle Filling Station and Cooler

Model HTHBHVR8-NF



IMPORTANT

THIS IS AN INDOOR/OUTDOOR APPLICATION. ALL SERVICE TO BE PERFORMED BY AN AUTHORIZED SERVICE PERSON.

Model HTHBHVR8BL-NF



Note: Danger! Electric shock hazard. Disconnect power before servicing unit.

Uses HFC-134A refrigerant

TOOLS REQUIRED

BUT NOT PROVIDED:

SAFETY GLASSES
GLOVES
ELECTRIC DRILL
3/4” WRENCH OR CRECENT WRENCH
UTILITY KNIFE
TAPE MEASURE
PENCIL
CENTER PUNCH
1/2” SOCKET & RATCHET WRENCH
5/32” ALLEN WRENCH

IMPORTANT! INSTALLER PLEASE NOTE.

THE GROUNDING OF ELECTRICAL EQUIPMENT SUCH AS TELEPHONE, COMPUTERS, ETC. TO WATER LINES IS A COMMON PROCEDURE. THIS GROUNDING MAY BE IN THE BUILDING OR MAY OCCUR AWAY FROM THE BUILDING. THIS GROUNDING CAN CAUSE ELECTRICAL FEEDBACK INTO A FOUNTAIN, CREATING AN ELECTROLYSIS WHICH CAUSES A METALLIC TASTE OR AN INCREASE IN THE METAL CONTENT OF THE WATER. THIS CONDITION IS AVOIDABLE BY USING THE PROPER MATERIALS AS INDICATED. ANY DRAIN FITTINGS PROVIDED BY THE INSTALLER SHOULD BE MADE OF PLASTIC TO ELECTRICALLY ISOLATE THE FOUNTAIN FROM THE BUILDING PLUMBING SYSTEM. WE SUGGEST THAT THE BOTTLE FILLING STATION AND WATER COOLER BE PROTECTED BY A GROUND FAULT CIRCUIT INTERRUPTER (GFCI).

HTHBHVR8-NF Bottle Fillers are among the easiest to install on the market today. To insure you install these models easily and correctly, PLEASE READ THESE SIMPLE INSTRUCTIONS BEFORE STARTING THE INSTALLATION. CHECK YOUR INSTALLATION FOR COMPLIANCE WITH PLUMBING, ELECTRICAL, AND OTHER APPLICABLE CODES. After installation, leave these instructions with the Fountain for future reference.

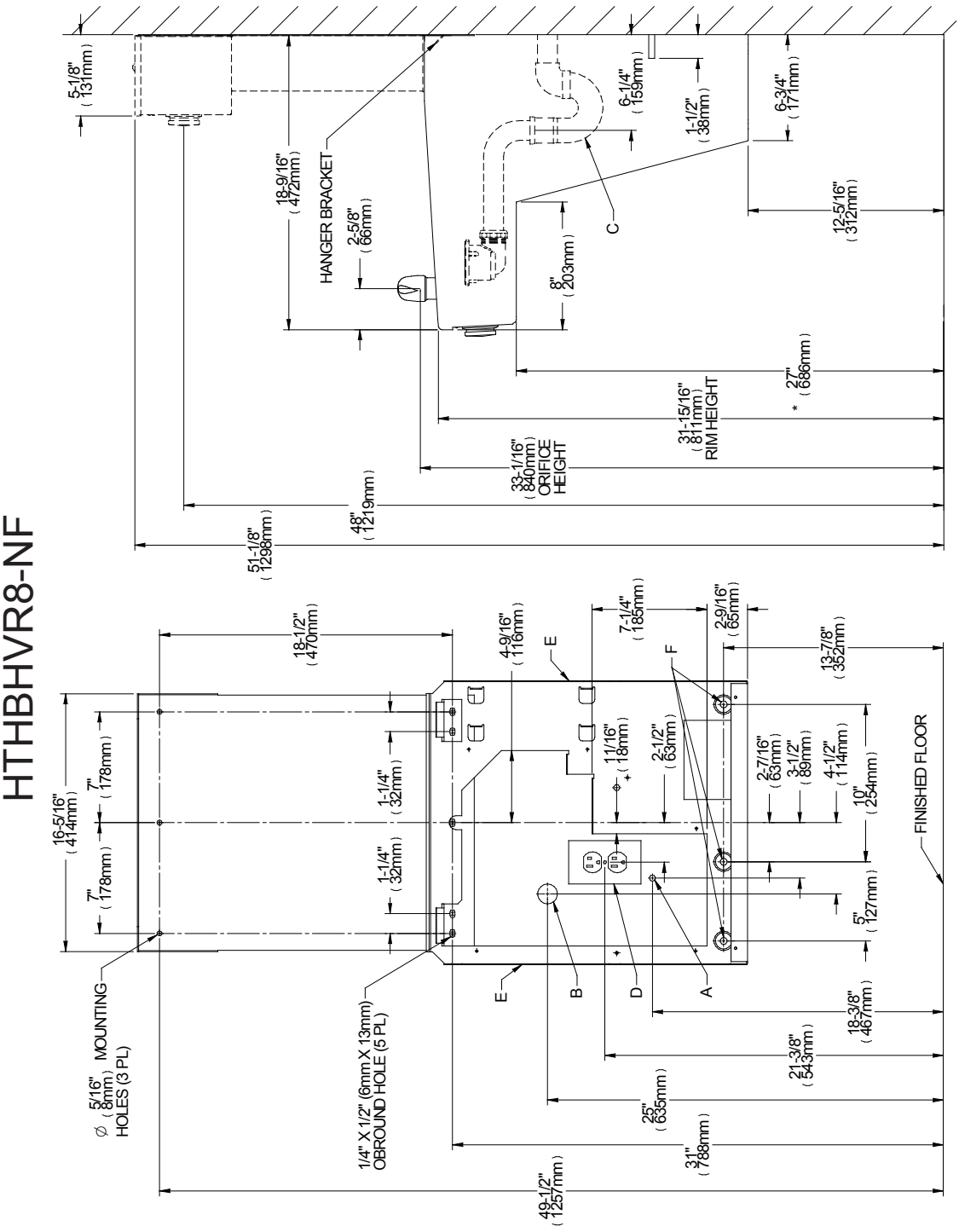

** REDUCE HEIGHT BY 3" FOR INSTALLATION OF CHILDREN'S ADA COOLER*

LEGEND:
A = RECOMMENDED WATER SUPPLY LOCATION 3/8" O.D. UNPLATED COPPER TUBE CONNECT STUB 1-1/2" (38mm) OUT FROM WALL. SHUT OFF VALVE NOT FURNISHED.
B = RECOMMENDED LOCATION FOR WASTE OUTLET 1-1/4" O.D. DRAIN.
C = 1-1/4" TRAP NOT FURNISHED.
D = ELECTRICAL SUPPLY (3) WIRE RECESSED BOX, DUPLEX OUTLET REQUIRED.
E = INSURE PROPER VENTILATION BY MAINTAINING 6" (152mm) MIN. CLEARANCE FROM CABINET LOUVER TO WALL.
F = 7/16" BOLT HOLES FOR FASTENING UNITS TO WALL.

Single Rough-In
Fig. 1

HTHBHVRBL8-NF

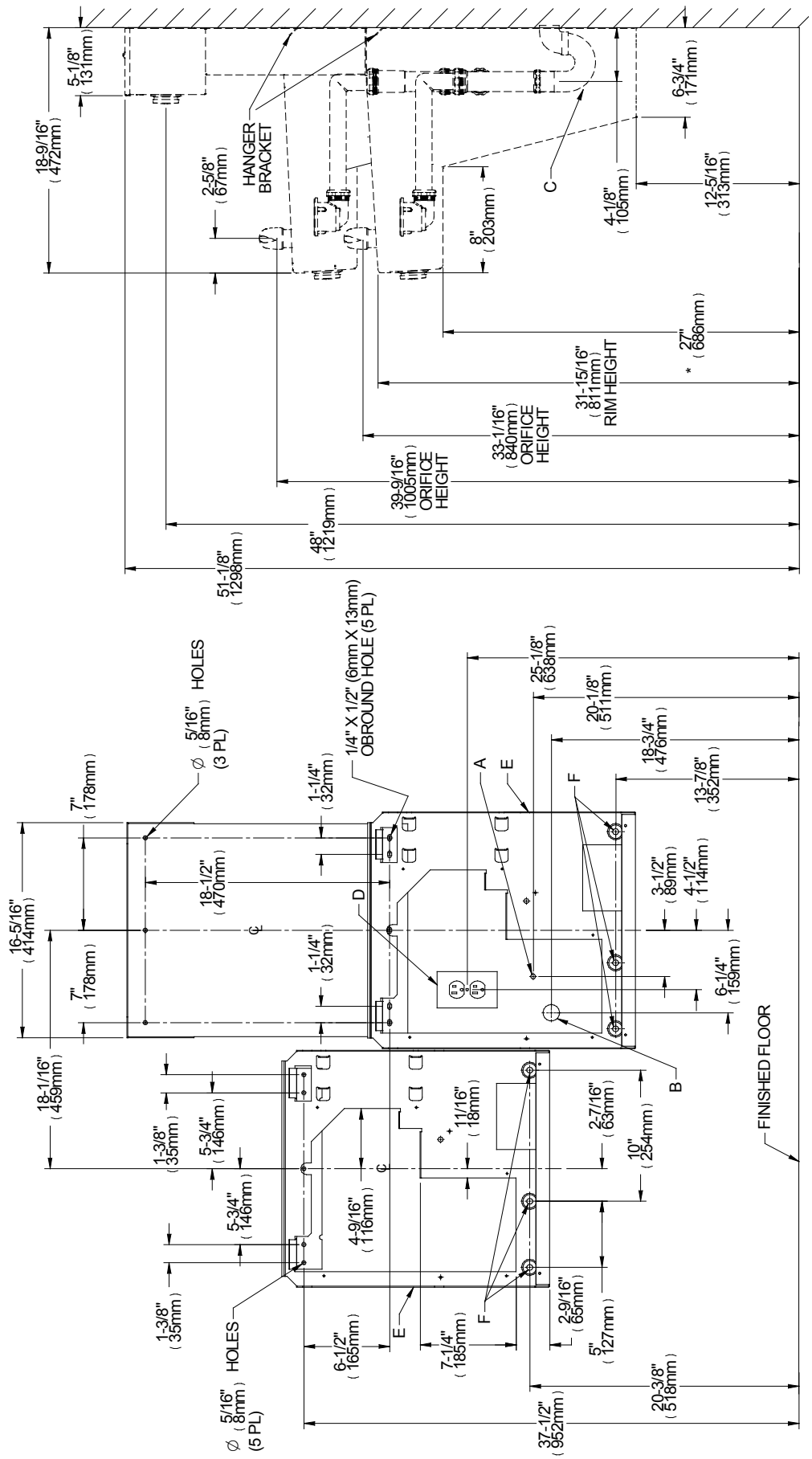

* *REDUCE HEIGHT BY 3" FOR INSTALLATION OF CHILDREN'S ADA COOLER*

LEGEND:
A = RECOMMENDED WATER SUPPLY LOCATION 3/8" O.D. UNPLATED COPPER TUBE CONNECT STUB 1-1/2" (38mm) OUT FROM WALL. SHUT OFF VALVE NOT FURNISHED.
B = RECOMMENDED LOCATION FOR WASTE OUTLET 1-1/2" O.D. DRAIN.
C = 1-1/2" TRAP NOT FURNISHED.
D = ELECTRICAL SUPPLY (3) WIRE RECESSED BOX, DUPLEX OUTLET REQUIRED.
E = INSURE PROPER VENTILATION BY MAINTAINING 6" (152mm) MIN. CLEARANCE FROM CABINET LOUVER TO WALL.
F = 7/16" BOLT HOLES FOR FASTENING UNITS TO WALL.

Two -Level Rough-In
Fig. 2

HTHBHVRBLR8-NF

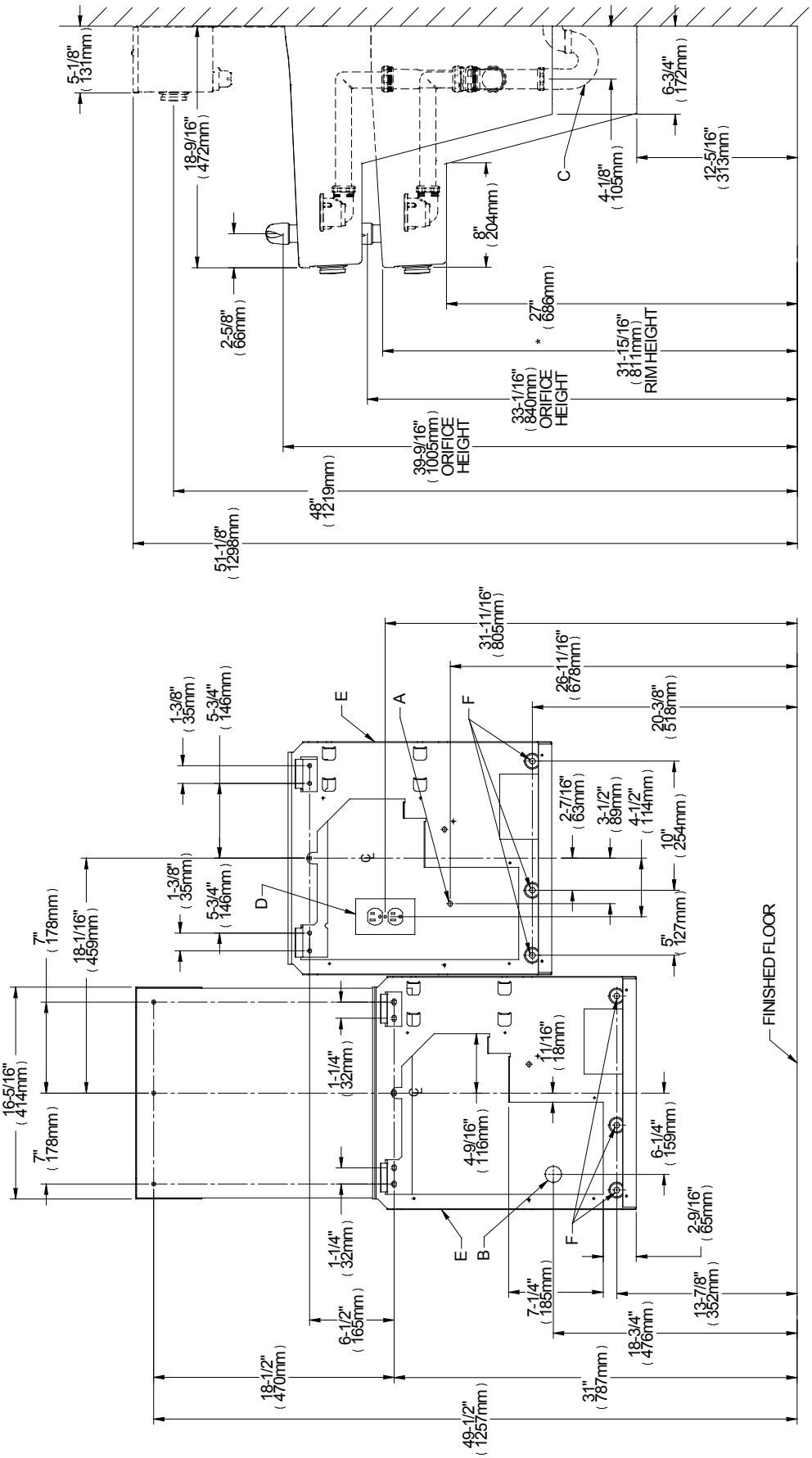

* *REDUCE HEIGHT BY 3" FOR INSTALLATION OF CHILDREN'S ADA COOLER*

LEGEND:
A = RECOMMENDED WATER SUPPLY LOCATION 3/8" O.D. UNPLATED COPPER TUBE CONNECT STUB 1-1/2" (38mm) OUT FROM WALL. SHUT OFF VALVE NOT FURNISHED.
B = RECOMMENDED LOCATION FOR WASTE OUTLET 1-1/4" O.D. DRAIN.
C = 1-1/2" TRAP NOT FURNISHED.
D = ELECTRICAL SUPPLY (3) WIRE RECESSED BOX, DUPLEX OUTLET REQUIRED.
E = INSURE PROPER VENTILATION BY MAINTAINING 6" (152mm) MIN. CLEARANCE FROM CABINET LOUVER TO WALL.
F = 7/16" BOLT HOLES FOR FASTENING UNITS TO WALL.

Two -Level Reversed Rough-In
Fig. 3

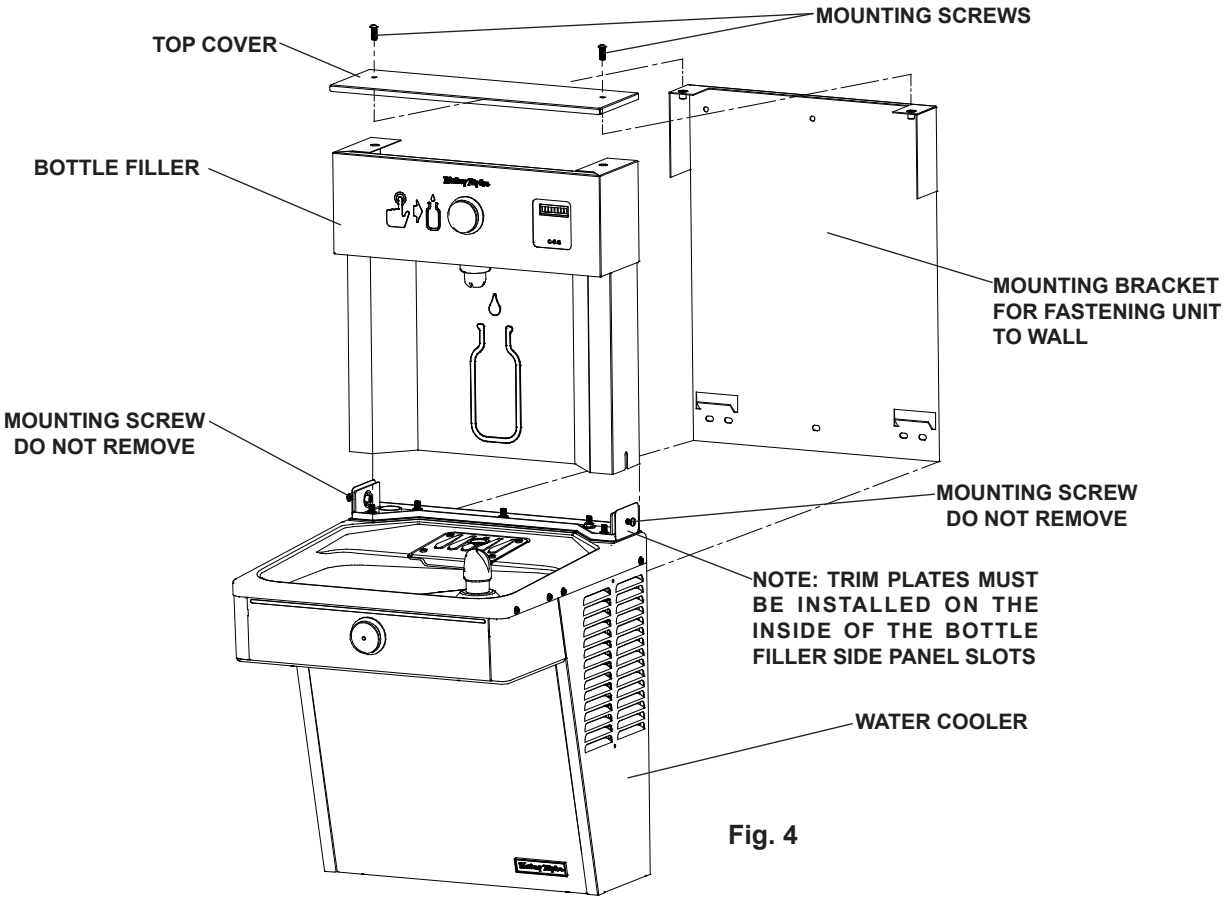

Fig. 4

BOTTLE FILLER INSTALLATION

1) **Remove wall mounting plate(s)** from Cooler(s). Install Wall Mounting Plate(s) as per rough-in diagrams on sheet 2 or 3 of this instruction.
NOTE: Mounting plate(s) **MUST** be supported securely. Add fixture support carrier if wall will not provide adequate support.
2) **For Single Model Installations:** Install water cooler onto wall bracket and secure to wall. Connect drain and water inlet to cooler as required (See rough-in on page 2). **DO NOT** connect power to cooler at this time or turn water supply on.
2a) **For Bi-Level Model Installations:** Install lower water cooler only at this time onto bracket as per rough-in diagram on sheet 3.
3) **Remove VRC Bottle Filler from carton.** Remove 3/8" to 1/4" reducing union from end of waterline, (do not throw away it will be needed later). Lay Bottle Filler on water cooler basin and cut insulation from tube even with bottom of unit, remove this insulation from the 3/8" tube, but do not discard. Feed the power cord, and waterline through the hole on top of water cooler. Feed the Reset Button wire from circuit board down through the hole in the basin.
NOTE: To prevent scratching the basin place a towel or soft cloth over the entire basin when working above it.
4) **With the power cord,** and waterline and reset button wires through the hole on top of water cooler place Bottle Filler on to mounting bracket on basin. (See Fig. 3). Make sure bottle filler is installed properly on the basin gasket.
5) **Once Bottle Filler is installed** on basin mounting bracket, tighten the two screws (supplied) one on each side of the bottle filler. Install Top Cover on Bottle Filler (See FIG. 3) with two mounting screws (supplied) . Caution do not over tighten screws.
6) **For Bi-Level Model Installations:** Secure non-refrigerated unit to wall, connect drains and water inlet. Connect black reset button wires from non-refrigerated unit to the black wires on the refrigerated unit (see step 4).
6a) **For Reversed Two Level Model Installations:** Secure refrigerated unit to wall, connect drains and water inlet. Connect the black reset button wires from the non-refrigerated unit to the bottle filler unit above.
7) **For Single Model Installations:** Install remaining tube insulation to the water line from bottle filler, connect Bottle Filler waterline inside of the water cooler by connecting the 3/8" water line with the 3/8" to 1/4" union and short piece of poly tube that was previously installed to the tee at the evaporator outlet.
7a) **For Bi-Level Model Installations:** Install the 1/4" poly tubing and insulation from the outlet of the filter to the union on top of the evaporator. Install the 1/4" poly tubing and insulation from the regulator in the non-refrigerated cooler to one of the tees at the evaporator outlet. Install remaining tube insulation to the water line from bottle filler, connect Bottle Filler waterline inside of the water cooler by connecting the 3/8" water line with the 3/8" to 1/4" union and short piece of poly tube that was previously installed to the tee at the evaporator on the refrigerated cooler.
8) **Turn water supply on** and inspect for leaks. Fix all leaks before continuing.
9) **Once unit has been inspected** for leaks and any leaks found corrected, plug Bottle Filler and HVR unit into wall. Be sure to reinstall fuse to the circuit or switch the circuit breaker back to the "ON" position.
10) **Once power is applied to Bottle Filler,** the GREEN LED light should illuminate showing good filter status along with the LCD Bottle Counter.
11) **Verify proper dispensing** by depressing the button at the top of the Bottle Filler and verify water dispenses. Note: the first initial dispenses might have air in line which may cause a sputter. This will be eliminated once all air is purged from the line.
12) **Once unit tests out,** install Lower Panel back on HVR water cooler(s). Unit is now ready for use.

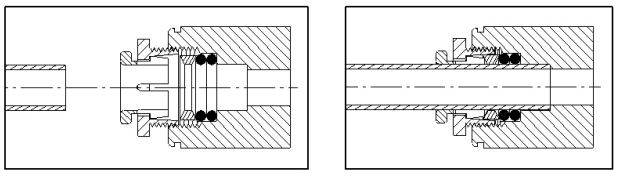

Note: Screw the locknut hand tight to seal

Fig. 5

OPERATION OF QUICK CONNECT FITTINGS

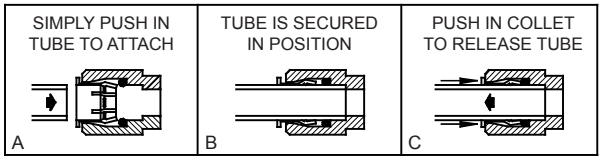

PUSHING TUBE IN BEFORE PULLING IT OUT HELPS TO RELEASE TUBE

Fig. 6

REMOVAL OF BOTTLE FILLER FOR SERVICING

1) **Turn off the water supply** to the Water Cooler(s). Unplug and/or turn off Circuit Breaker to Cooler(s) and Bottle Filler. **NOTE:** the Lower Front Panel of the cooler(s) may need to be removed. To prevent scratching the basin place a towel or soft cloth over the entire basin when working above it.
2) **For Single Model Installations:** Loosen but DO NOT remove the two (2) Pinned Torx Head Screws from the sides of the Bottle Filler. Remove the two (2) Pinned Torx Head Screws from the Top Cover & remove the Top Cover. The Bottle Filler may then be lifted up and off the Water Cooler (The water line and Remote Reset Button Wires will still be connected from the Water Cooler to the Bottle Filler.).
3) **For Two Level Model Installations:** Loosen but DO NOT remove the Pinned Torx Head Screw from the outer side of the Bottle Filler and loosen but DO NOT remove the 1/4" hex. head bolt from between the two cooler (See Figs 6 or 7). Remove the two (2) Pinned Torx Head Screws from the Top Cover & remove the Top Cover. The Bottle Filler may then be lifted up and off the Water Cooler (The water line and Remote Reset Button Wires will still be connected from the Water Cooler to the Bottle Filler.)

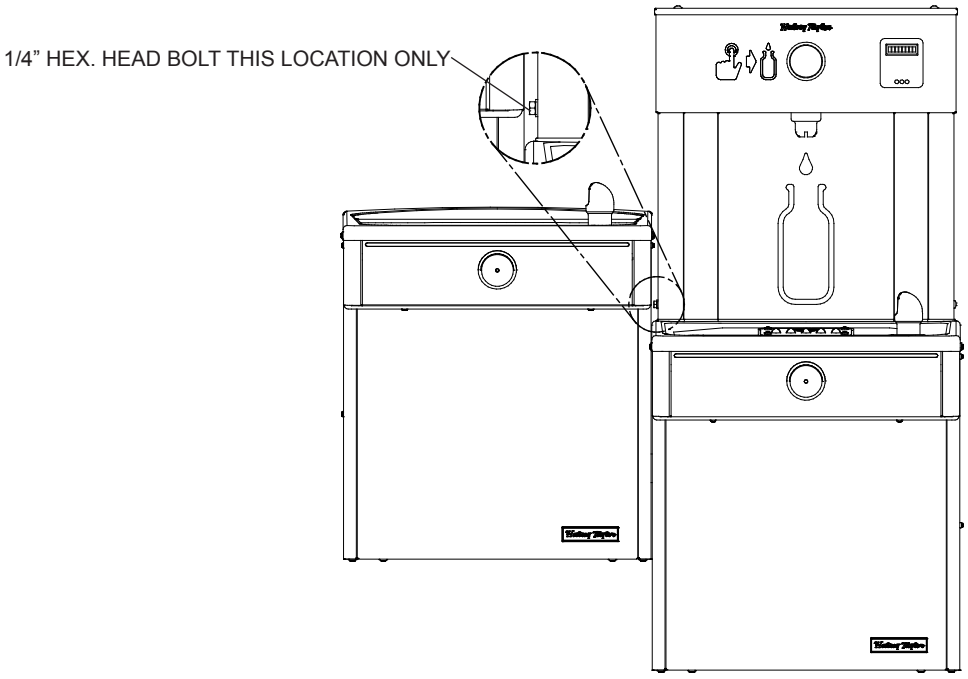

Fig. 6

STANDARD TWO-LEVEL CONFIGURATION

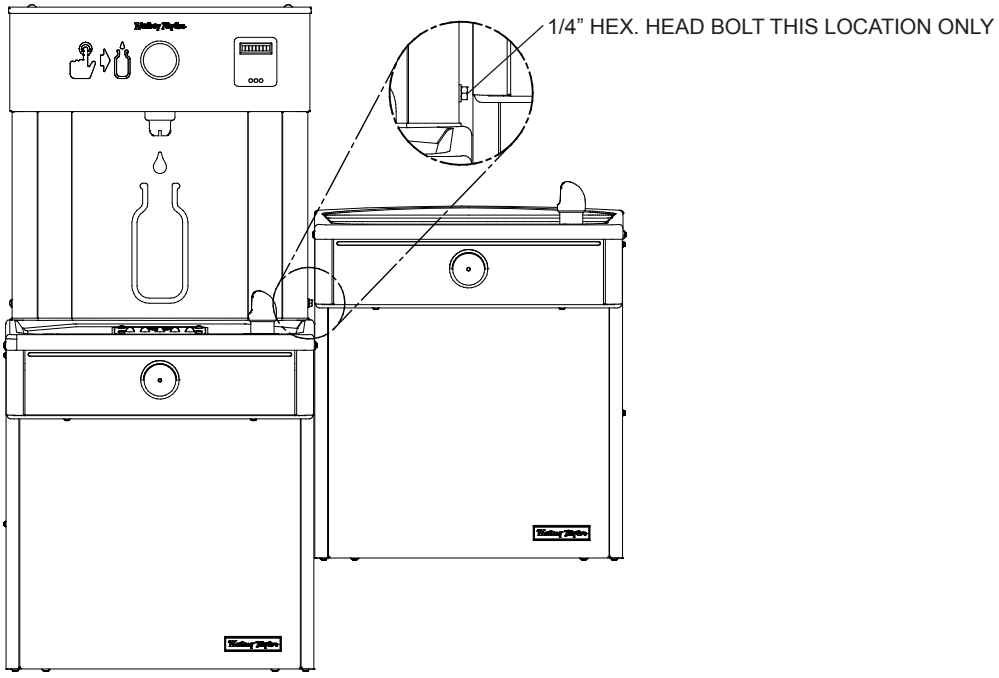

STANDARD TWO-LEVEL REVERSED CONFIGURATION

Fig. 7

BF9 PROGRAM
SETTING THE CONTROL BOARD

VERIFY CONTROL BOARD SOFTWARE

1) To verify the software program of the control board the unit will need to be shut down and restarted. The chiller (if present) does not need to be shut down and restarted.
2) The units lower panel must be open to access the power cord and wall outlet.
3) Shut down the unit by unplugging the power cord from the wall outlet.
4) Restart the unit by plugging the power cord back into the wall outlet.
5) Upon start up the bottle count display will show the software designation of BF9 or BF11.
6) Reference the BF9 or BF11 instructions for setting the control board.

ACCESSING THE PROGRAMMING BUTTON

1) To access the program button remove the bottom cover of the water cooler. The reset button is located on the left side of the cooler near the cold control. Replace the bottom cover after programming operations are completed.
NOTE: There is a reset button located under the top cover on the left hand side of the bottle filler also.

RESET THE FILTER MONITOR

1) Instructions apply to filtered units only.
2) Depress the program button for approximately 2 seconds until the display changes then release. The display will change and scroll through two messages:
"RST FLTR" – Reset Filter Monitor
"SETTINGS" – System Settings Sub Menu
If the program button is not pushed again the display will scroll through the two messages above for three cycles and then default back to bottle count and be back in run mode.
3) When the display changes to "RST FLTR", depress the button again. The display will change to show "FLT =". Depress the button again and the display will show "FLTR =0"
4) The Green LED should be illuminated indicating that the visual filter monitor has been reset.

SETTING UNIT TYPE

1) Depress the program button for approximately 2 seconds until the display changes then release. The display will change and scroll through two messages:
"RST FLTR" – Reset Filter Status LED
"SETTINGS" – System Settings Sub Menu
If the program button is not pushed again the display will scroll through the two messages above for three cycles and then default back to bottle count and be back in run mode.
2) When the display changes to "SETTINGS", depress the button again. The display will change to show
"RNG SET"- Range set for IR sensor.
"UNIT TYP" - Type of unit (REFRIG or NON-REFRIG)
"RST BCNT" - Reset bottle count
3) When display shows "UNIT TYPE" push program button once the display will show current value
Can be REFRIG or NON-REFRIG
4) Push button once to change value. Once value is selected the display will show the new value.
(Can be REFRIG or NON-REFRIG)
"REFRIG" - stands for refrigerated product. In this setting the flow rate is estimated at 1.0 gallon per minute.
"NON-REFRIG" - stands for non-refrigerated product. In this setting the flow rate is estimated at 1.5 gallons per minute.
Both "REFRIG" and "NON-REFRIG" simulated 1 bottle equal to 20 oz.
5) Allow approximately 4 seconds to pass and the display will return to bottle counter and be in run mode.

RESETTING BOTTLE COUNT

1) Depress the program button for approximately 2 seconds until the display changes then release. The display will change and scroll through two messages:
"RST FLTR" – Reset Filter Status LED
"SETTINGS" – System Settings Sub Menu
If the program button is not pushed again the display will scroll through the two messages above for three cycles and then default back to bottle count and be back in run mode.
2) When the display changes to "SETTINGS", depress the button again. The display will change to show
"RNG SET"- Range set for IR sensor.
"UNIT TYP" - Type of unit (REFRIG or NON-REFRIG)
"RST BCNT" - Reset bottle count
If the button is not pushed again the display will scroll through the three messages above for three cycles and return to run mode.
3) When display shows "RST BCNT" push program button once the display will show current value e.g. "00033183".
4) Once display shows current value push the program button once more to reset back to 0. The display will show BTLCT = 0 for approximately 2 seconds and then return to run mode showing 00000000 bottles.
5) To test bottle counter:
REFRIG units: Push and hold Bottle Filler Button for 9.4 seconds to see bottle counter count 00000001.
(This is based on filling a 20 oz. bottle).
NON-REFRIG units: Push and hold Bottle Filler Button for 6.25 seconds to see bottle counter count 00000001.
(This is based on filling a 20 oz. bottle)

BF11 - BF12 PROGRAM
SETTING THE CONTROL BOARD

VERIFY CONTROL BOARD SOFTWARE

1) To verify the software program of the control board the unit will need to be shut down and restarted. The chiller (if present) does not need to be shut down and restarted.
2) The units lower panel must be open to access the power cord and wall outlet.
3) Shut down the unit by unplugging the power cord from the wall outlet.
4) Restart the unit by plugging the power cord back into the wall outlet.
5) Upon start up, the bottle count display will show the software designation of BF11.
6) Reference the BF9 or BF11 instructions for setting the control board.

ACCESSING THE PROGRAMMING BUTTON

1) To access the program button remove the top cover of the bottle-filler. Remove the two (2) screws holding top cover to bottle-filler with a 5/32" allen wrench. Remove top cover. Do not discard mounting screws, they will be needed to reinstall the top cove after programming operations are completed. The programming button is located at the top right side of the unit on the control board.

SETTING RANGE OF THE IR SENSOR

1) Depress the program button for approximately 2 seconds until the display changes then release. The display will change and scroll through two messages:
   "RST FLTR" – Reset Filter Status LED
   "SETTINGS" – System Settings Sub Menu
   If the program button is not pushed again the display will scroll through the two messages above for three cycles and then default back to bottle count and be back in run mode.
2) When the display changes to "SETTINGS", depress the button again. The display will change to show
   "RNG SET" - Range set for IR sensor.
   "UNIT TYP" - Type of unit (REFRIG or NON-RFRG)
   "FLT SIZE" - Select filter capacity
   "RST BCNT" - Reset bottle count
3) When display shows "RNG SET" push program button once the display will show current value (can be 1 – 10) e.g. "RNG = 3".
4) Once display shows current value push the program button to scroll through value of 1 – 10. Select the desired range setting, "1" being closest to sensor and "10" being farthest away.
5) Once range is selected allow approximately 4 seconds to pass and then the display will go back to bottle counter and be in run mode.
6) Test bottle filler by placing bottle or hand in front of sensor to make sure water is dispensed.

SETTING UNIT TYPE

1) Depress the program button for approximately 2 seconds until the display changes then release. The display will change and scroll through two messages:
   "RST FLTR" – Reset Filter Status LED
   "SETTINGS" – System Settings Sub Menu
   If the program button is not pushed again the display will scroll through the two messages above for three cycles and then default back to bottle count and be back in run mode.

Continued from below:

2) When the display changes to "SETTINGS", depress the button again. The display will change to show
   "RNG SET" - Range set for IR sensor.
   "UNIT TYP" - Type of unit (REFRIG or NON-RFRG)
   "FLT SIZE" - Select filter capacity
   "RST BCNT" - Reset bottle count
3) When display shows "UNIT TYPE" push program button once the display will show current value. Can be REFRIG or NON-RFRG
4) Push button once to change value. Once value is selected the display will show the new value. (Can be REFRIG or NON-RFRG)
   "REFRIG" - stands for refrigerated product. In this setting the flow rate is estimated at 1.0 gallon per minute.
   "NON-RFRG" - stands for nonrefrigerated product. In this setting the flow rate is estimated at 1.5 gallons per minute. Both "REFRIG" and "NON-RFRG" simulate 1 bottle equal to 20 oz.
5) Allow approximately 4 seconds to pass and the display will return to bottle counter and be in run mode.

RESETTING BOTTLE COUNT

1) Depress the program button for approximately 2 seconds until the display changes then release. The display will change and scroll through two messages:
   "RST FLTR" – Reset Filter Status LED
   "SETTINGS" – System Settings Sub Menu
   If the program button is not pushed again the display will scroll through the two messages above for three cycles and then default back to bottle count and be back in run mode.
2) When the display changes to "SETTINGS", depress the button again. The display will change to show:
   "RNG SET"- Range set for IR sensor.
   "UNIT TYP" - Type of unit (REFRIG or NON-RFRG)
   "FLT SIZE" - Select filter capacity
   "RST BCNT" - Reset bottle count
   If the button is not pushed again the display will scroll through the four messages above for three cycles and return to run mode.
3) When display shows "RST BCNT" push program button once the display will show current value, e.g. "0033183".
4) Once display shows current value push the program button once more to reset back to 0. The display will show BTLCT = 0 for approximately 2 seconds and then return to run mode showing 00000000 bottles.
   NOTE: Once the bottle count is reset to zero there is no way to return to the previous bottle count.
5) Testing the bottle counter:
   REFRIG units: Place bottle or hand in front of sensor for approximately 9 seconds to see bottle counter count 00000001,
   (This is based on filling a 20 oz. bottle).
   NON-RFRG units: Place bottle or hand in front of sensor for approximately 6 seconds to see bottle counter count 00000001,
   (This is based on filling a 20 oz bottle).

REPLACEMENT PART KITS

PART NO.	DESCRIPTION
98543C	Kit - Electrical Package 115V
98545C	Kit - Solenoid Valve Replacement 115V
98546C	Kit - Aerator Replacement
98549C	Kit - Hardware & Waterway Parts
98631C	Kit - Electrical Package 220V
98632C	Kit - Solenoid Valve Replacement 220V
98999C	Kit - Drain Pad
99000C	Kit - Button Assembly
1000001907	Kit - Top Cover Replacement
99002C	Kit - Gasket VR BF Tower Basin
99003C	Kit - Reset Switch
99004C	Kit - Micro Switch

Halsey Taylor
2222 CAMDEN COURT
OAK BROOK, IL 60523
630.574.3500

PRINTED IN U.S.A.

FOR PARTS CONTACT YOUR LOCAL DISTRIBUTOR OR VISIT OUR WEBSITE WWW.HALSEYTAYLOR.COM