ELKAY®
SPECIFICATIONS

# Elkay 8in Centerset Exposed Deck Mount Faucet 44in Flexible Hose with 1.2 GPM Spray Head + 8in Arc Tube Spout 2in Lever Handles

## Model(s) LK843AF08LC

## PRODUCT SPECIFICATIONS

Elkay 8in Centerset Exposed Deck Mount Faucet 44in Flexible Hose with 1.2 GPM Spray Head + 8in Arc Tube Spout 2in Lever Handles. Faucet has a flow rate of 1.5 GPM, and is made of Chrome Plated Brass material, with a Quarter Turn Ceramic Disc valve. Faucet requires 3 faucet holes.

| | |
|---|---|
| **Mounting Type:** | Deck Mount |
| **Special Features:** | Low Flow<br>Solid Brass Construction |
| **Spray Type:** | Pre Rinse |
| **Finish:** | Chrome (CR) |
| **Handle Type:** | Lever Handle |
| **Spout Reach:** | 30" |
| **Spout Height:** | 41-1/8" |
| **Hole Drillings:** | 3 |
| **Material:** | Chrome Plated Brass |
| **Valve Type:** | Quarter Turn Ceramic Disc |
| **Valve Connection:** | 1/2"-14 NPT |
| **Flow Rate:** | 1.5 GPM |
| **Faucet Hole Spread:** | 8 |
| **Spout Swing Rotation:** | 360° |
| **Spout Type:** | Flexible Spout |

**Special Note:** 1.2 GPM spray head



Chrome
(CR)



AMERICAN PRIDE. A LIFETIME TRADITION.
Like your family, the Elkay family has values and traditions that endure. For almost a century, Elkay has been a family-owned and operated company, providing thousands of jobs that support our families and communities.

**Product Compliance:** ADA & ICC A117.1
ASME A112.18.1/CSA B125.1
NSF 61
NSF 372 (lead free)

Clean and Care Manual (PDF)
Installation Instructions (PDF)
Limited Warranty (PDF)

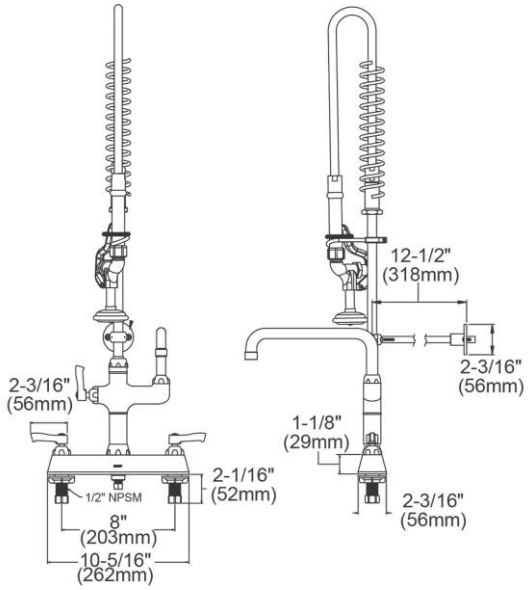


PART:_____QTY: _____

PROJECT:_____

CONTACT:_____

DATE:_____

NOTES:_____

APPROVAL:_____

*In keeping with our policy of continuing product improvement, Elkay reserves the right to change product specifications without notice. Please visit elkay.com for the most current version of Elkay product specification sheets. This specification describes an Elkay product with design, quality, and functional benefits to the user. When making a comparison of other producers' offerings, be certain these features are not overlooked.*


© 2018

ELKAY®
SPECIFICATIONS

# Elkay 8in Centerset Exposed Deck Mount Faucet 44in Flexible Hose with 1.2 GPM Spray Head + 8in Arc Tube Spout 2in Lever Handles

## Model(s) LK843AF08LC

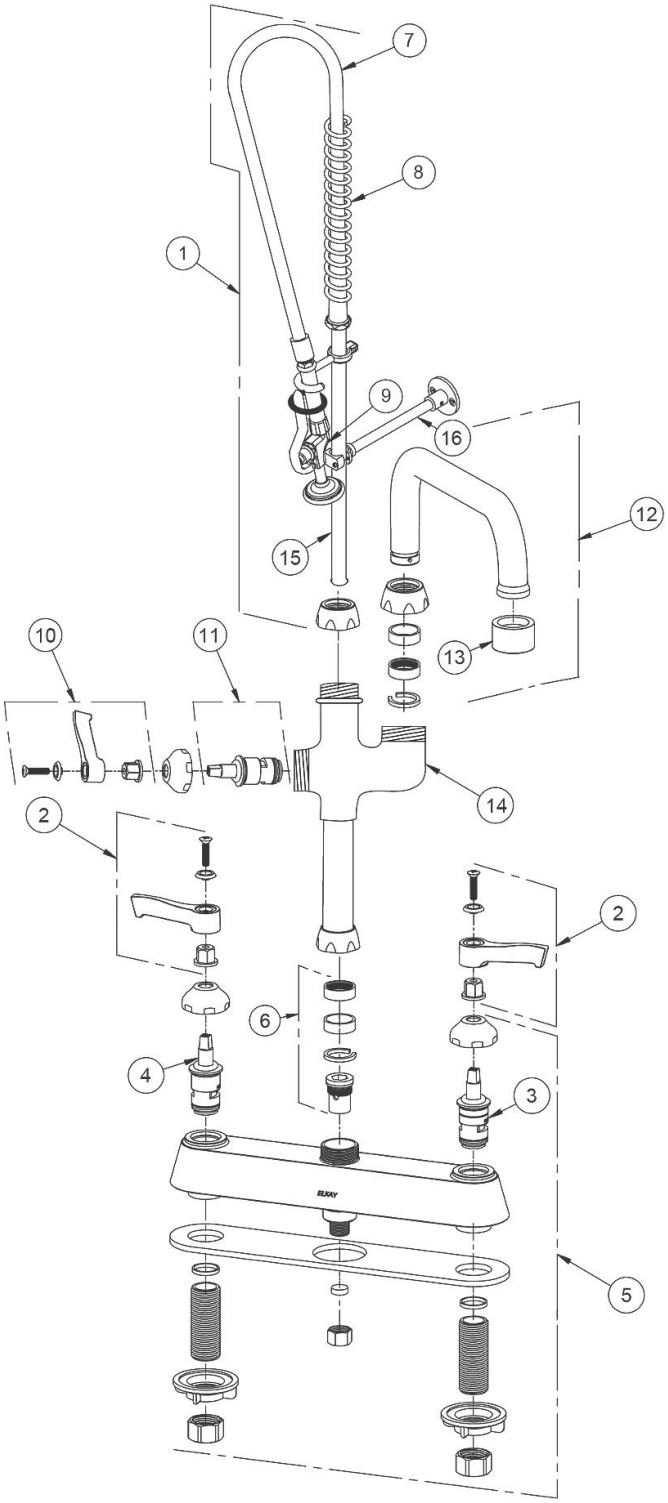


| ITEM | IND. PART | DESCRIPTION |
|---|---|---|
| 1 | 45938C | Pre-Rinse Assembly |
| 2 | 45918C | Handle, 2" |
| 3 | 45923C | Right Cold Cartridge |
| 4 | 45924C | Left Hot Cartridge |
| 5 | 45915C | Body |
| 6 | 98554C | Backflow Kit |
| 7 | 45943C | 44" Hose |
| 8 | 45944C | Spring |
| 9 | 45942C | Spray Valve |
| 10 | A55385 | Handle, 2" |
| 11 | P29121NL | Cartridge |
| 12 | A55393 | Spout, 8" |
| 13 | LK734 | 2.2 GPM VR Aerator |
| 14 | 45934C | Add On Faucet Body |
| 15 | 45945C | Tall Riser |
| 16 | 45946C | Support Rod |

*In keeping with our policy of continuing product improvement, Elkay reserves the right to change product specifications without notice. Please visit elkay.com for the most current version of Elkay product specification sheets. This specification describes an Elkay product with design, quality, and functional benefits to the user. When making a comparison of other producers' offerings, be certain these features are not overlooked.*


© 2018