Owners Manual

4410 Bottle Filler Freeze Resistant Tubular Fountain with 98836C Single Valve Control Assembly

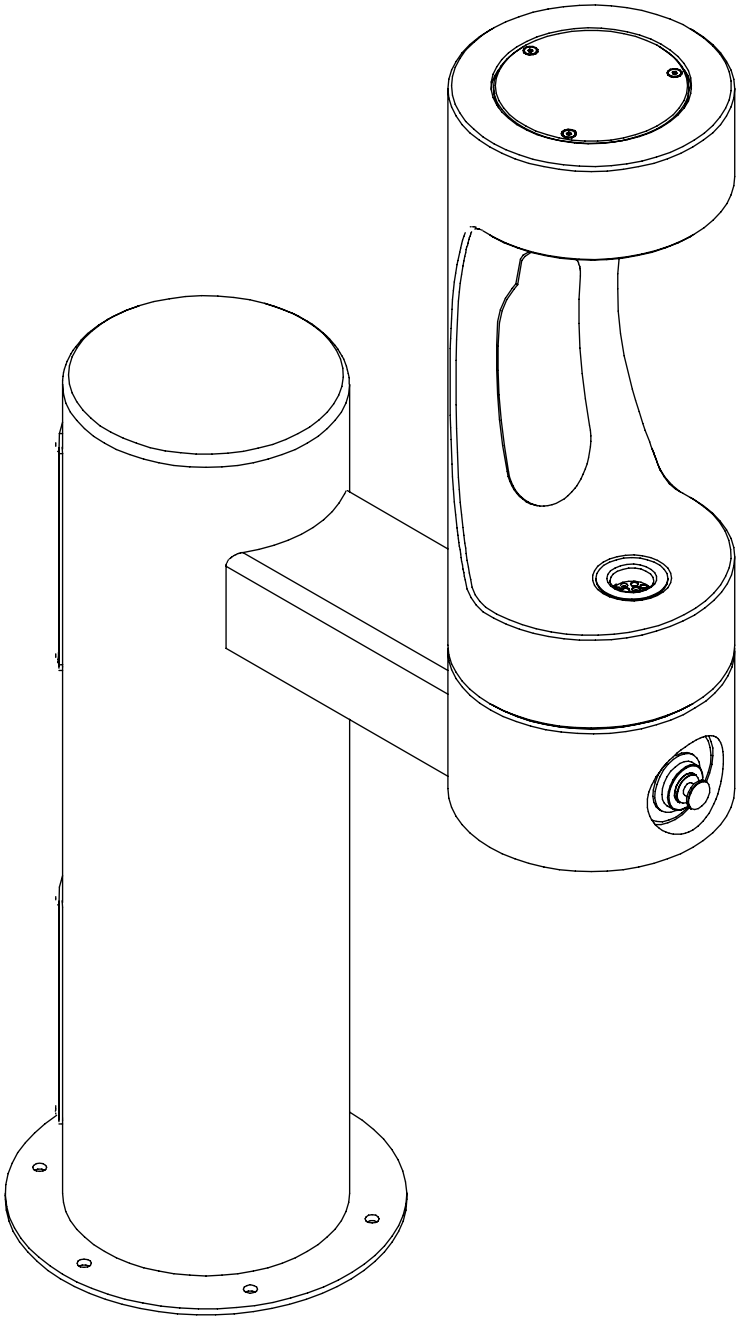

INSTALLER

4410BFFR Fountains are among the easiest to install Fountains on the market today. To assure you install these models easily and correctly, PLEASE READ THESE SIMPLE INSTRUCTIONS BEFORE STARTING THE INSTALLATION. CHECK YOUR INSTALLATION FOR COMPLIANCE WITH PLUMBING, ELECTRICAL, AND OTHER APPLICABLE CODES. After installation, leave these instructions with the Fountain for future reference.

INSTALLATION INSTRUCTIONS

IMPORTANT

ALL SERVICE TO BE PERFORMED BY AN AUTHORIZED SERVICE PERSON

IMPORTANT! INSTALLER PLEASE NOTE.

THE GROUNDING OF ELECTRICAL EQUIPMENT SUCH AS TELEPHONE, COMPUTERS, ETC. TO WATER LINES IS A COMMON PROCEDURE. THIS GROUNDING MAY BE IN THE BUILDING OR MAY OCCUR AWAY FROM THE BUILDING. THIS GROUNDING CAN CAUSE ELECTRICAL FEEDBACK INTO A FOUNTAIN, CREATING AN ELECTROLYSIS WHICH CAUSES A METALLIC TASTE OR AN INCREASE IN THE METAL CONTENT OF THE WATER. THIS CONDITION IS AVOIDABLE BY USING THE PROPER MATERIALS AS INDICATED. ANY DRAIN FITTINGS PROVIDED BY THE INSTALLER SHOULD BE MADE OF PLASTIC TO ELECTRICALLY ISOLATE THE FOUNTAIN FROM THE BUILDING PLUMBING SYSTEM.

IMPORTANT! INSTALLER PLEASE NOTE

Do not pull up on lines coming out of the PVC column. This raises the water valve above the frost line with disastrous results.

General Installation Tips

1. Be sure to flush water supply line before you connect it to the inlet fitting on Freeze Resistant Valve System.
2. There are two drain lines required for this unit. One for the drinking fountain basin drain and one for the valve/water supply line system. The bottle filler drain is the 3/4" PVC fitting at the bottom of the 6" PVC tube and the valve drains through the small holes in the PVC cap. Provide ample drainage for these two items. It's always better to have too much then not enough.
3. The column (6" PVC tube) must remain vertical. Be sure it remains vertical when backfilling the excavating trench.
4. When the concrete pad, for mounting the fountain, is poured, be sure to allow adequate space around the top of the column so that the flexible cap may be removed for servicing the valve.
5. We recommend that the top of the column be flush or slightly above the top height of the concrete pad.
6. You should test the unit before you backfill. Simply blow on the clear, small diameter tubing. A steady stream should flow from the braided tubing line. When air pressure is removed from the clear tubing the water stream should stop.
7. Once you have tested the valve, backfilled the hole and poured the concrete mounting pad you are ready to set the fountain. After bolting the fountain in place connect the air control valve tubing, supply water tubing and drain lines. The water supply line must have a straight run from the basin bubbler down to the control valve. If a straight run is not maintained water will become trapped and freeze leaving the unit inoperable. Test the fountain again. If it fails to work, the air control line may be kinked or connected improperly. Be sure to keep water out of the air control line.
8. These products are designed to operate on 20 PSI to 105 PSI supply line pressure. If inlet pressure above 105 PSI, a pressure regulator must be installed in the supply line. Any damage caused by reason of connecting this product to supply line pressure lower than 20 PSI or higher than 105 PSI is not covered by warranty.

INSTALLATION INSTRUCTIONS FOR INSTALLING 98836C SINGLE VALVE CONTROL ASSY.

1. Prepare trench for water supply and waste drain lines (if required by local codes). The hole should be deep enough to accommodate the PVC column and 5 cubic feet of porous fill (large broken rock). Additional porous fill may be required due to local ground conditions. (See Site Preparation Detail below).
2. Lay drain lines and water supply lines. Provide service shut off valve for maintenance. Flush the water supply line before attaching to the shut off valve.
3. Set PVC column in excavating pit. Connect the water supply line to the inlet on the PVC column. Remove valve assembly from the PVC column by carefully pulling up on the nylon strap. Pressure test the valve assembly for leaks. Check operation of the water valve by blowing on the small clear diameter tubing. A steady stream of water should flow from the braided tubing. After releasing air pressure from the small clear tubing the water stream should stop.
4. Replace the water valve into the PVC column. Make sure the supply hose coils into the bottom of the PVC column without any kinks. Cap the PVC column, protect the ends of the connecting tubes and backfill the trench. Keep the PVC column vertical at all times.
5. Form the concrete mounting pad and locate the fountain 3/8" minimum fasteners (not included) in the proper position. (Refer to Rough-in for correct location of 3/8" minimum fasteners.) (Fasteners not included). Pour concrete and finish. Be sure to keep concrete away from the top of the PVC column to allow removal of PVC cap to allow for future service. Let concrete set 24 hours minimum before mounting fountain.
6. Double check that the water valve is positioned fully at the bottom of the PVC column. Install insulation into the PVC column and push down onto the top of the water valve.
7. Mount the fountain onto the 3/8" minimum fasteners. (Fasteners not included). (Level and shim fountain as required.
8. Connect the drain line, water line and air control lines. Excess lengths should be trimmed from the tubing. The water supply line must be positioned for positive drain back out of the fountain and down through the water valve. **Any water allowed to be trapped above the frost line will freeze leaving the unit inoperable.** Do not pull up on the connection lines as this could raise the valve above the frost line.
9. Check for proper operation by using fountain push button. If the valve does not work properly check for leaks or kinks in the air control line.
10. After insuring proper operation reassemble fountain. Installation of your fountain is now complete.

SITE PREPARATION DETAIL FOR THE 4410BFFR FTN. WHEN USING 98836C SINGLE VALVE CONTROL ASSY.

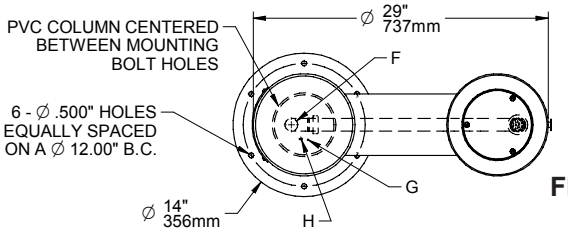

FIG.1

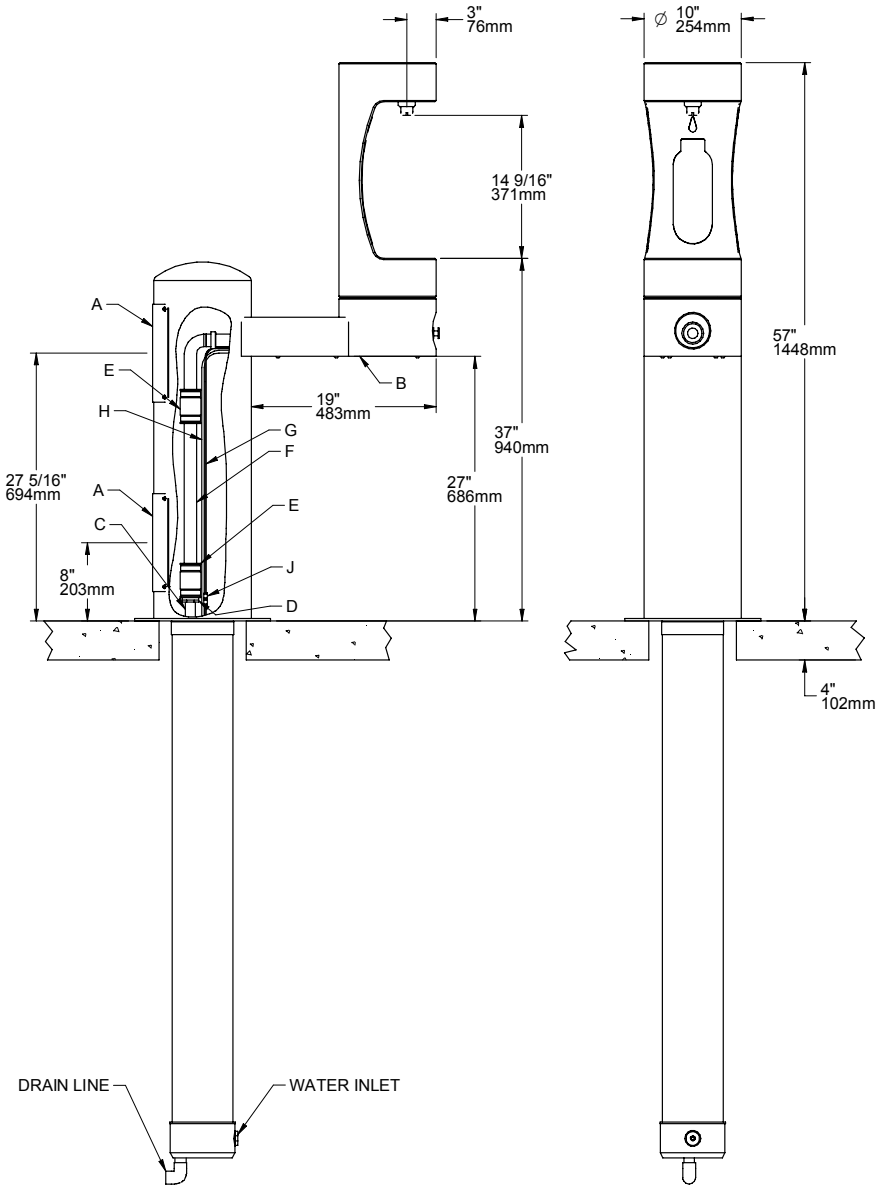

SITE PREPARATION DETAIL
FIG. 2

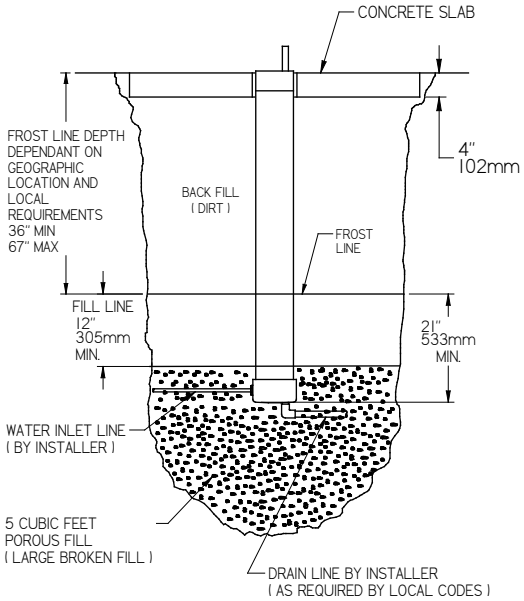

LEGEND

A = ACCESS PANEL (8" X 10")
B = REMOVABLE BOTTOM COVER
C = 1" PVC DRAIN
D = PRESSURE FITTING 1-1/4" x 3/4"
E = CONNECTOR 1-1/4" TO 1-1/4"
F = 1-1/4" DRAIN TUBE
G = AIR CONTROL LINE
H = 1/4" WATER LINE
J = CONNECTOR FOR AIR CONTROL LINE

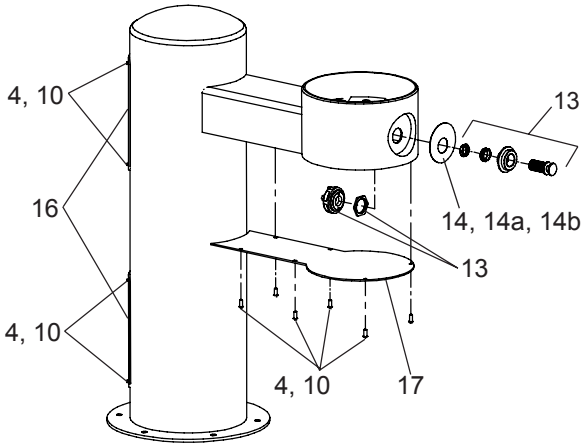

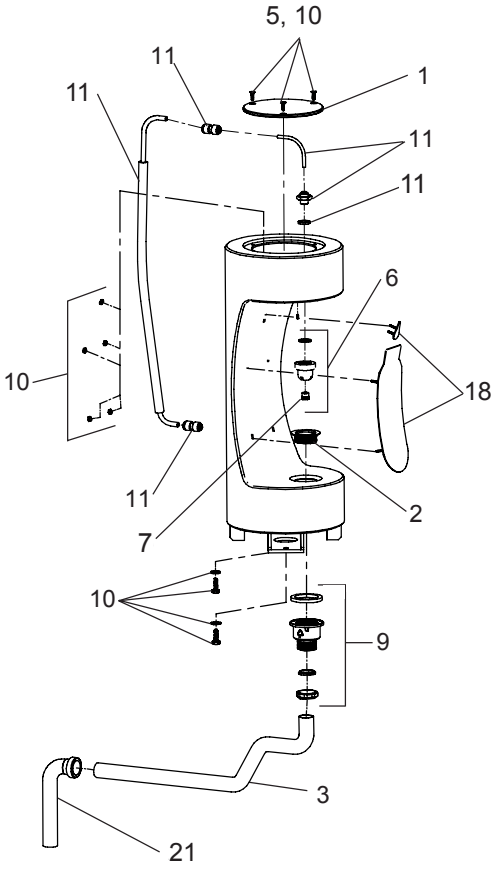

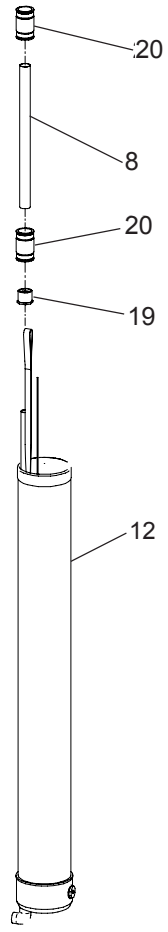

FIG. 3

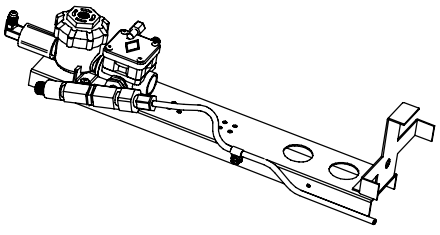

Single Valve Assy. (Item 15)
(Tubing not included)

TROUBLE SHOOTING

Insufficient Flow: Check that the shut-off valve is wide open. Verify minimum 20 PSI supply pressure. Clean inlet strainer screen located in the valve body. Clean rubber orifice in flow control located below frost line in bushing between barb fitting and valve.

No Flow: Check for leaks in the air tubing going from the push button to the valve. Make sure the air tubing compression nut is hand tight. Disconnect air tube from push button. Place finger over air outlet. Push button to test diaphragm. Tighten diaphragm cap screws. Replace diaphragm if necessary.

Continued Insufficient or Varied Height of Flow:

- Replace flow control.
- Check for kinks in the tubing.
- Remove the PVC cap from the PVC column. Remove the valve assembly from the PVC column by carefully pulling up on the nylon strap. Pressure test the valve assembly for leaks. Replace the valve into the PVC column. Make sure the supply hose coils into the bottom of the PVC column without any kinks and double check that the valve is positioned fully at the bottom of the PVC column. Cap the PVC column.

Continuous Flow: Insure that push button is not obstructed and springs back to normal position. Remove four screws which secure plastic diaphragm block to valve body. Pull plastic and rubber diaphragm assembly out of valve body. Locate tiny hole in rubber diaphragm just under lip of plastic part. Clean debris from this hole. Inspect valve seat for grooves. If valve seat was OK and diaphragm hole was free from debris, inspect rubber button located at center of floating steel disc in valve diaphragm block assembly. If button is worn, turn disc over or replace it. If diaphragm and seats are in good condition, stretch spring slightly. Spring is located behind floating stainless steel plate. Insure that air bleed port on valve plastic block assembly is not plugged.

The following items are included with the 4410BFFR Fountain

PARTS LIST		
ITEM NO.	PART NO.	DESCRIPTION
1	28955C*	Cover - Round Plate
2	45931C	Outdoor Bottle Filler Drain Plug
3	66816C	Tube - Drain (Arm Only)
4	97247C	Kit - VR Torx Screw/Bit
5	75724C	Pinned Torx Screw - 1/4-20 x 3/4"
6	98679C	Kit - Nozzle
7	98680C	Kit - Aerator/Key
8	66346C	Drain Tube
9	98683C	Kit - Plastic Drain
10	98685C	Kit - 4400 Series Hardware
11	98686C	Kit - Bottle Filler Waterway
12	98836C	Single Control Valve System
13	98901C	Kit - Frz Resist Push Button
14	28703C	Blank Nameplate Insert (only)
14a	28703C-LK	LK4410BFFR Nameplate Insert (only)
14b	28091C-HT	4410BFFR Nameplate Insert (only)
15	98902C	Single Control Valve Assy. (BF)
16	45832C*	Panel - Access
17	45833C*	Cover - Panel
18	98681C	Kit - Blank Bottle Filler Trim
	1000003692	Kit - LK4410BFFR Bottle Filler Trim
	1000003693	Kit - 4410BFFR Bottle Filler Trim
19	55960C	Fitting - 1-1/4" to 3/4" Pressure
20	66461C	Fitting - 1-1/4" x 1-1/4" Rubber
21	72001843	Fitting - Slip Ell Drain
NS	75565C	Fitting - Double Male Connector
NS	56123C	Tubing - 1/8" Poly (Cut To Length) - To Actuator
NS	56307C	Tubing - 3/8" Poly (Cut to Length)

*select color option to complete part number
NS = Not Shown

FINISH COLOR OPTIONS** – ***Choose color option to complete your model number, add as suffix example:
*4410BFFRK**EVG***

Matte finish: ☐ Evergreen = **EVG**

Gloss finish:

☐ Beige = **BGE**	☐ Gray = **GRY**	☐ Terracotta = **TER**
☐ Black = **BLK**	☐ Orange = **ORN**	☐ White = **WHT**
☐ Blue = **BLU**	☐ Purple = **PUR**	☐ Yellow = **YLW**
☐ Brown = **BRN**	☐ Red = **RED**	

PRINTED IN U.S.A.
Halsey Taylor – halseytaylor.com
Elkay – elkay.com

FOR PARTS CONTACT YOUR LOCAL DISTRIBUTOR OR CALL TECHNICAL SERVICES AT 1.800.834.4816
2222 CAMDEN COURT, OAK BROOK, ILLINOIS 60523