Halsey Taylor
SPECIFICATIONS

Halsey Taylor HydroBoost Retrofit Bottle Filling Station & OVL-II Fountain Filtered 8 GPH Stainless
Model HTHBWF-OVL-RF

PRODUCT SPECIFICATIONS

Halsey Taylor HydroBoost® Retrofit Bottle Filling Station, & OVL-II™ Fountain, Filtered 8 GPH Stainless. Chilling Capacity of 8.0 GPH (gallons per hour) of 50° F drinking water, based on 80° F inlet water and 90° F ambient, per ASHRAE 18 testing. Features shall include Sanitary Sensor Activated, Visual Filter Monitor, Filtered, Green Counter™, Laminar Flow, Antimicrobial, Real Drain. Furnished with Double Bubbler™. Electronic Bottle Filler Button With Mechanical Front Bubbler Button activation. Product shall be Wall Mount (In-Wall Frame/Plate), for Indoor applications, serving 2 station(s). Unit shall be certified to UL 399 and CAN/CSA C22.2 No. 120. Unit shall be lead-free design which is certified to NSF/ANSI 61 & 372 (lead free) and meets Federal and State low-lead requirements.



AMERICAN PRIDE. A LIFETIME TRADITION.
Like your family, the Elkay family has values and traditions that endure. For almost a century, Elkay has been a family-owned and operated company, providing thousands of jobs that support our families and communities.

Included with Product: Integral Bottle Filling Station, Filter, Mounting Frame, Panels

PRODUCT COMPLIANCE

ADA & ICC A117.1

Buy American Act

CAN/CSA C22.2 No. 120

GreenSpec®

NSF/ANSI 42, 53, 61, & 372 (lead free)

UL 399

Complies with ADA & ICC A117.1 accessibility requirements when installed according to the requirements outlined in these standards. Installation may require additional components and/or construction features to be fully compliant. Consult the local Authority Having Jurisdiction if necessary.

Installation Instructions (PDF)

5 Year Limited Warranty on the refrigeration system of the unit. Electrical components and water system are warranted for 12 months from date of installation. **Warranty pertains to drinking water applications only. Non-drinking water applications are not covered under warranty.**

Warranty (PDF)

OPTIONAL ACCESSORIES

55898C - WaterSentry Plus Replacement Filter (Bottle Fillers)
HTOVLAPR - Accessory - Cane Apron for OVL-II Models (Gray)
ACCESS12X38-5 - Accessory - Access Panel
WSF6000R-2PK - WaterSentry Fresh 6000 CTO Filter - Replacement (2pack)

In keeping with our policy of continuing product improvement, Halsey Taylor reserves the right to change product specifications without notice. Please visit Halseytaylor.com for the most current version of Halsey Taylor product specification sheets. This specification describes a Halsey Taylor product with design, quality, and functional benefits to the user. When making a comparison of other producers' offerings, be certain these features are not overlooked.

PART:_____QTY: _____

PROJECT:_____

CONTACT:_____

DATE:_____

NOTES:_____

APPROVAL:_____

In keeping with our policy of continuing product improvement, Halsey Taylor reserves the right to change product specifications without notice. Please visit Halseytaylor.com for the most current version of Halsey Taylor product specification sheets. This specification describes a Halsey Taylor product with design, quality, and functional benefits to the user. When making a comparison of other producers' offerings, be certain these features are not overlooked.

Halsey Taylor HydroBoost Retrofit Bottle Filling Station & OVL-II Fountain Filtered 8 GPH Stainless
Model HTHBWF-OVL-RF

Special Features:	Sanitary Sensor Activated, Visual Filter Monitor, Filtered, Green Counter™, Laminar Flow, Antimicrobial, Real Drain
Finish:	Stainless Steel
Power:	115V/60Hz
Bubbler Style:	Double Bubbler™
Activation by:	Electronic Bottle Filler Button With Mechanical Front Bubbler Button
Mounting Type:	Wall Mount (In-Wall Frame/Plate)
Chilling Option*:	8.0 GPH
Full Load Amps	1
Rated Watts:	15
Dimensions (L x W x H):	38-1/2" x 19" x 40-13/16"
Approx. Shipping Weight:	55 lbs.
Installation Location:	Indoor
No. of Stations Served:	2
*Based on 80° F inlet water & 90° F ambient air temp for 50° F chilled drinking water.	

Special Note: Utilizes existing single fountain, right mounting frame and water chiller.

- Mechanically-Activated bubbler continues to supply water in event of service disruptions.
- Touchless, sensor-activation, designed for easy use.
- Visual Filter Monitor: LED Filter Status Indicator for when filter change is necessary.
- Filter is certified to NSF 42 and 53 for lead, particulate, chlorine, taste and odor reduction. 3,000 gal. capacity.
- Green Counter: Informs user of number of 20 oz. plastic water bottles saved from waste.
- Laminar flow provides clean fill with minimal splash.
- Silver Ion Antimicrobial protection on key plastic components to inhibit the growth of mold and mildew.
- Real Drain System eliminates standing water.
- Exclusive Double Bubbler which projects two separate streams that converge to form a fuller, more satisfying drink.

COOLING SYSTEM

- Compressor: Hermetically-sealed, reciprocating type, single phase. Sealed-in lifetime lubrication.
- Condenser: Fan cooled, copper tube with aluminum fins. Fan motor is permanently lubricated.
- Cooling Unit: Combination tube-tank type. Continuous copper tubing with is fully insulated with EPS foam that meets UL requirements for self-extinguishing material.
- Refrigerant Control: Refrigerant R-134a is controlled by accurately calibrated capillary tube.
- Temperature Control: Easily accessible enclosed adjustable thermostat is factory preset. Requires no adjustment other than for altitude requirements.

In keeping with our policy of continuing product improvement, Halsey Taylor reserves the right to change product specifications without notice. Please visit Halseytaylor.com for the most current version of Halsey Taylor product specification sheets. This specification describes a Halsey Taylor product with design, quality, and functional benefits to the user. When making a comparison of other producers' offerings, be certain these features are not overlooked.

Halsey Taylor HydroBoost Retrofit Bottle Filling Station & OVL-II Fountain Filtered 8 GPH Stainless
Model HTHBWF-OVL-RF

IMPORTANT!
Retro-fit is designed to fit on an existing OVL-II™ refrigerated style fountain which is properly installed per the Spec Sheet rough-in information.

ELECTRICAL
Equipped with electrical cord and three-prong molded rubber plug for use with 15-amp minimum receptacle. Rated at 115V/60Hz, single phase.

These products are designed to operate on 20 psi to 105 psi supply line pressure.

OPERATION OF QUICK CONNECT FITTINGS

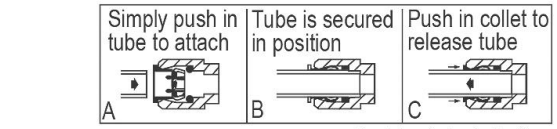

Pushing tube in before pulling it out helps to release tube

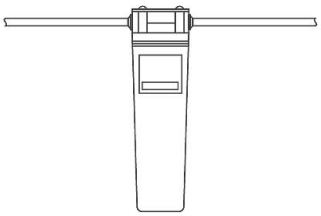

WaterSentry® Plus Filter System

BOTTLE FILLER / FOUNTAIN INSTALLATION
AFTER RETRO-FIT CONVERSION

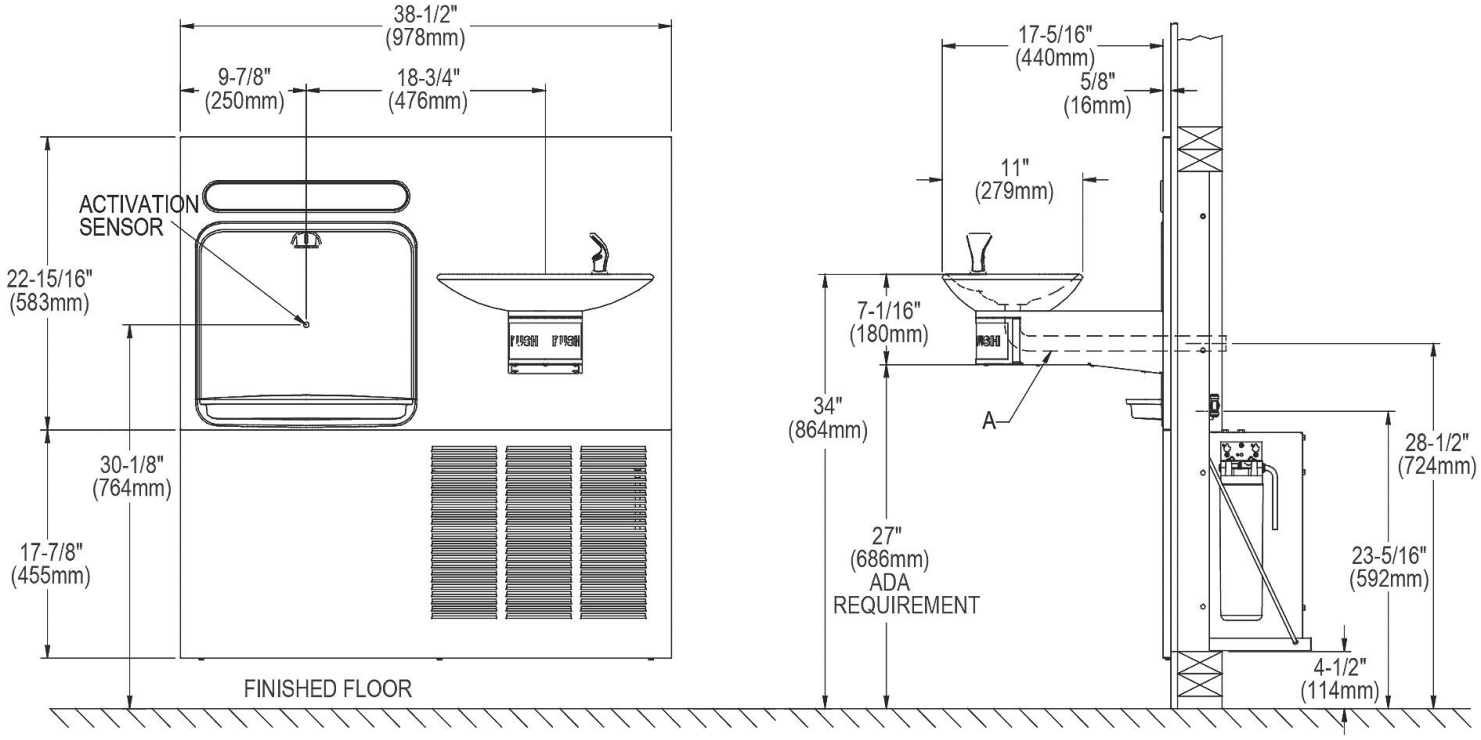

NOTE : New Installations Must Use Ground Fault Circuit Interrupter (GFCI). It is highly recommended that the circuit be dedicated and the load protection be sized for 20 amps.

In keeping with our policy of continuing product improvement, Halsey Taylor reserves the right to change product specifications without notice. Please visit Halseytaylor.com for the most current version of Halsey Taylor product specification sheets. This specification describes a Halsey Taylor product with design, quality, and functional benefits to the user. When making a comparison of other producers' offerings, be certain these features are not overlooked.

Halsey Taylor HydroBoost Retrofit Bottle Filling Station & OVL-II Fountain Filtered 8 GPH Stainless
Model HTHBWF-OVL-RF

MOUNTING FRAME 0000001052

IMPORTANT!
Retro-fit is designed to fit on an existing OVL-II™ refrigerated style fountain which is properly installed per the Spec Sheet rough-in information.

ELECTRICAL
This unit is equipped with electrical cord and three-prong molded rubber plug for use with 15-amp minimum receptacle. Rated at 115V/60Hz, single phase.

These products are designed to operate on 20 psi to 105 psi supply line pressure.

INSTALLATION STEPS

Disassemble current Bi-Level Refrigerated fountain installation

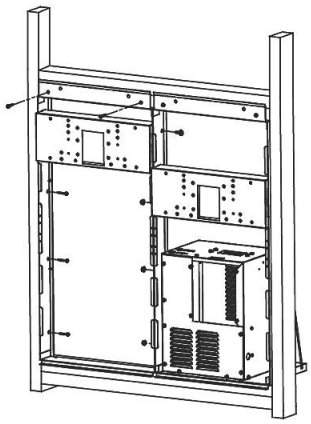

Typical current installation with fountains and panels removed

Remove left hand mounting frame, replace with new open frame (included)

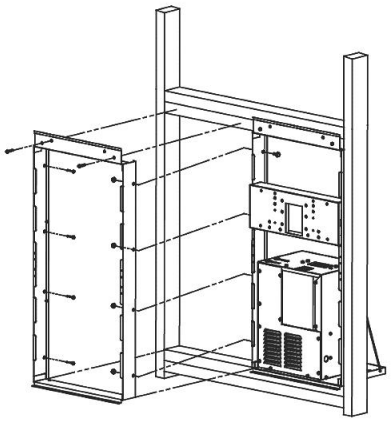

Reassemble installation with new upper panel / Bottle Filler as sembly, original fountain, original lower mounting frame, chiller shelf, chiller unit and new lower panel assembly

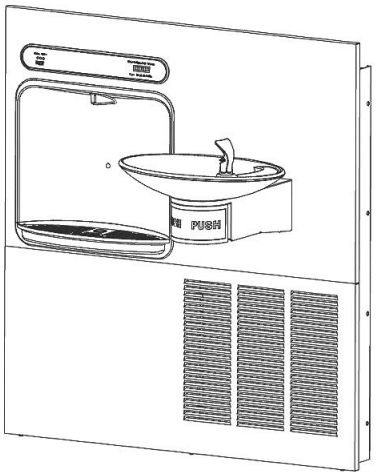

BOTTLE FILLER / FOUNTAIN INSTALLATION AFTER RETRO-FIT CONVERSION

In keeping with our policy of continuing product improvement, Halsey Taylor reserves the right to change product specifications without notice. Please visit Halseytaylor.com for the most current version of Halsey Taylor product specification sheets. This specification describes a Halsey Taylor product with design, quality, and functional benefits to the user. When making a comparison of other producers' offerings, be certain these features are not overlooked.