ELKAY®
SPECIFICATIONS

Elkay 4"-8-3/8" Adjustable Centers Wall Mount Faucet with Bucket Hook Spout 2" Lever Handles Rough Chrome
Model(s) LK400

PRODUCT SPECIFICATIONS

Elkay 4"-8-3/8" Adjustable Centers Wall Mount Faucet with Bucket Hook Spout 2" Lever Handles Rough Chrome. Faucet has a flow rate of 2.2 GPM, and is made of Chrome Plated Brass material, with a Brass Stem Assembly valve. Faucet requires 2 faucet holes.

Mounting Type:	Wall Mount
Special Features:	Adjustable hole spread
Finish:	Chrome (CR)
Handle Type:	Lever Handle
Spout Reach:	5-1/2"
Spout Height:	3-1/2"
Hole Drillings:	2
Material:	Chrome Plated Brass
Valve Type:	Brass Stem Assembly
Valve Connection:	3/8" Female Compression Hose Assembly
Flow Rate:	2.2 GPM
Faucet Hole Spread:	4
Spout Swing Rotation:	0°
Spout Type:	Bucket Hook

OPTIONAL ACCESSORIES

LKMK462 - Elkay 90 Degree Mounting Kit



Chrome
(CR)



AMERICAN PRIDE. A LIFETIME TRADITION.
Like your family, the Elkay family has values and traditions that endure. For almost a century, Elkay has been a family-owned and operated company, providing thousands of jobs that support our families and communities.

Product Compliance: ADA & ICC A117.1
ASME A112.18.1/CSA B125.1
NSF 61

Complies with ADA & ICC A117.1 accessibility requirements when installed according to the requirements outlined in these standards.

Clean and Care Manual (PDF)
Limited Warranty (PDF)

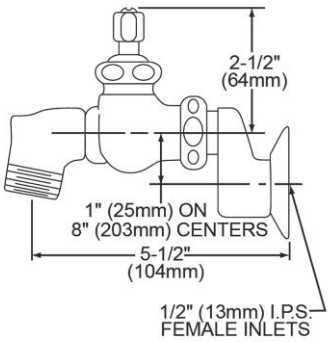

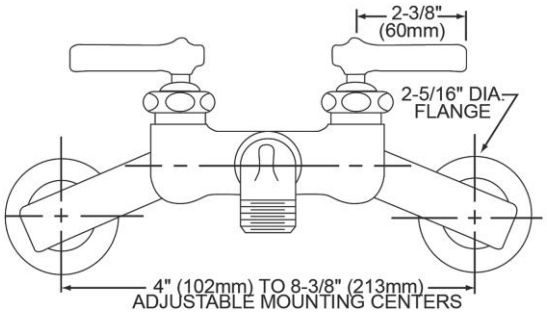

PART:_____QTY: _____

PROJECT:_____

CONTACT:_____

DATE:_____

NOTES:_____

APPROVAL:

In keeping with our policy of continuing product improvement, Elkay reserves the right to change product specifications without notice. Please visit elkay.com for the most current version of Elkay product specification sheets. This specification describes an Elkay product with design, quality, and functional benefits to the user. When making a comparison of other producers' offerings, be certain these features are not overlooked.

Elkay 4"-8-3/8" Adjustable Centers Wall Mount Faucet with Bucket Hook Spout 2" Lever Handles Rough Chrome

Model(s) LK400

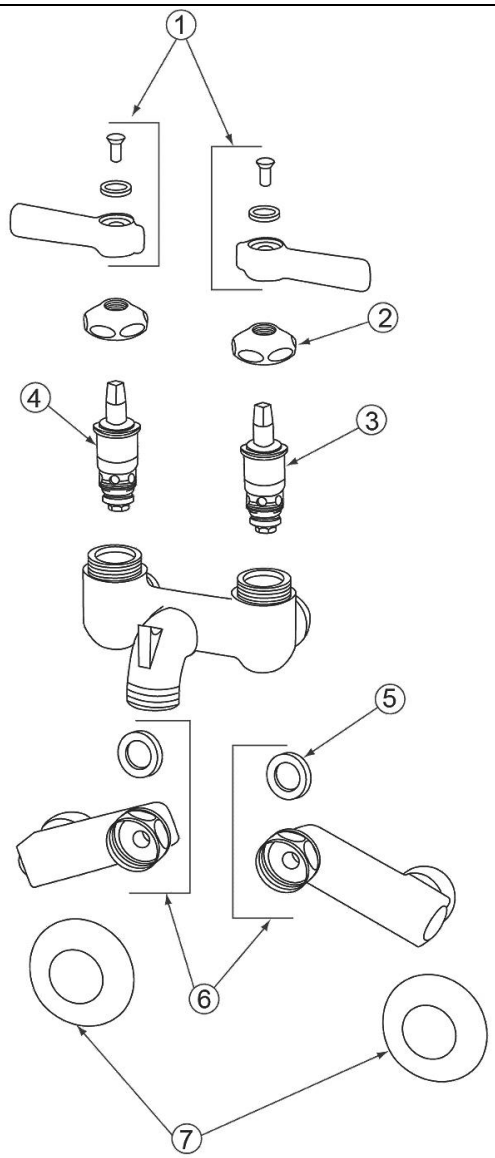

Item Number	Number Required	Part Number	Part Description
1	2	72001912	Lever Handle Assembly
2	2	72000554	Cap
3	1	72000149	RH Cartridge
4	1	72000150	LH Cartridge
5	2	72000756	Washer
6	2	72002021	Arm Assembly
7	2	72000548	Flange

In keeping with our policy of continuing product improvement, Elkay reserves the right to change product specifications without notice. Please visit elkay.com for the most current version of Elkay product specification sheets. This specification describes an Elkay product with design, quality, and functional benefits to the user. When making a comparison of other producers' offerings, be certain these features are not overlooked.