ELKAY®
SPECIFICATIONS

Elkay Commercial Service/ Utility Single Hole Wall Mount Faucet with Plain End Chrome
Model(s) LK69CP

PRODUCT SPECIFICATIONS

Elkay Commercial Service/ Utility Single Hole Wall Mount Faucet with Plain End Chrome. Faucet has a flow rate of 2.5 GPM, and is made of Chrome Plated Brass material, with a Brass Stem Assembly valve. Faucet requires 1 faucet holes.

Mounting Type:	Wall Mount
Finish:	Chrome (CR)
Handle Type:	Cross Handle
Spout Reach:	3-3/16"
Spout Height:	4"
Hole Drillings:	1
Material:	Chrome Plated Brass
Valve Type:	Brass Stem Assembly
Valve Connection:	1/2" NPT Female Inlet
Flow Rate:	2.5 GPM
Spout Swing Rotation:	0°
Spout Type:	Fixed Spout


Chrome
(CR)



Included with Product: **(Pair) Includes (1) LK69CP and (1) LK69CH**

AMERICAN PRIDE. A LIFETIME TRADITION.
Like your family, the Elkay family has values and traditions that endure. For almost a century, Elkay has been a family-owned and operated company, providing thousands of jobs that support our families and communities.

Product Compliance: ASME A112.18.1/CSA B125.1
NSF 61
NSF 372 (lead free)

Clean and Care Manual (PDF)
Limited Warranty (PDF)

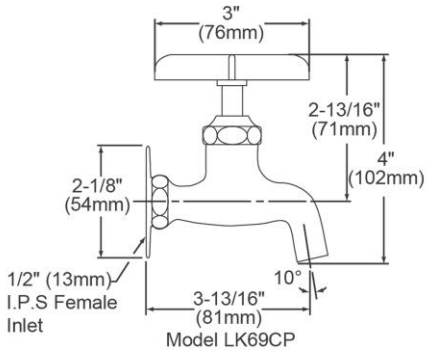

Model LK69CP

PART:_____QTY: _____

PROJECT:_____

CONTACT:_____

DATE:_____

NOTES:_____

APPROVAL:

In keeping with our policy of continuing product improvement, Elkay reserves the right to change product specifications without notice. Please visit elkay.com for the most current version of Elkay product specification sheets. This specification describes an Elkay product with design, quality, and functional benefits to the user. When making a comparison of other producers' offerings, be certain these features are not overlooked.

Elkay Commercial Service/ Utility Single Hole Wall Mount Faucet with Plain End Chrome
Model(s) LK69CP

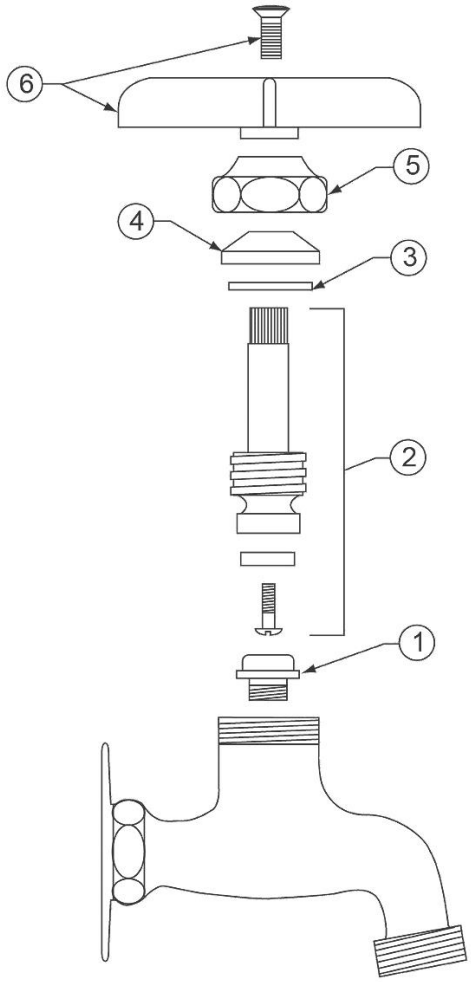

LK69CH

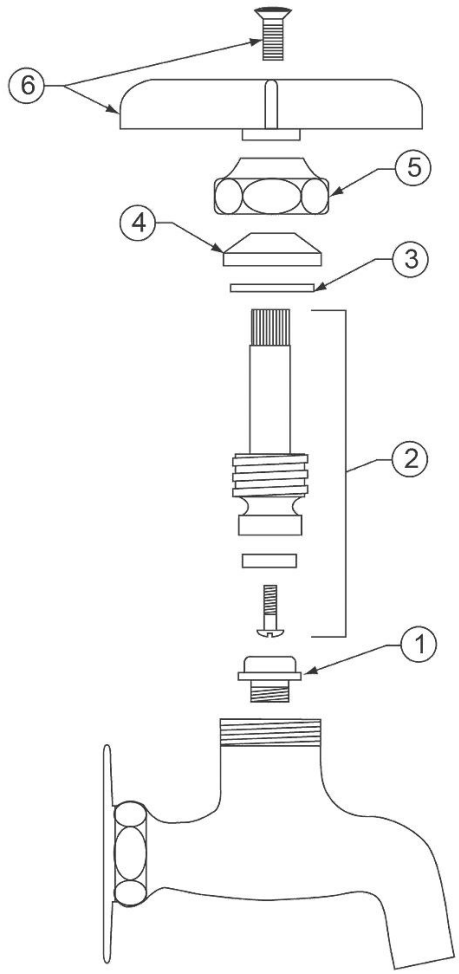

LK69CP

Item No.	No. Required	Part No.	Description
1	1	72001862	Seat Brass
2	1	72001865	Brass Stem Assembly
3	1	72001866	Washer Brass
4	1	72001867	Packing
5	1	72001868	Cap Nut Brass
6	1	72001869	Handle Zinc with Screw

In keeping with our policy of continuing product improvement, Elkay reserves the right to change product specifications without notice. Please visit elkay.com for the most current version of Elkay product specification sheets. This specification describes an Elkay product with design, quality, and functional benefits to the user. When making a comparison of other producers' offerings, be certain these features are not overlooked.