Elkay Vandal Resistant Lever Handle Classroom Bubbler
Model(s) LKVRBH1141A

PRODUCT SPECIFICATIONS

Elkay Vandal Resistant Lever Handle Classroom Bubbler. Overall dimensions are 7-1/4" x 1-15/16" x 5-15/16". Made of Chrome Plated Brass.

Material:	Chrome Plated Brass
Finish:	Chrome (CR)
Dimensions:	7-1/4" x 1-15/16" x 5-15/16"
Shipping Weight:	5 lbs.

- Vandal-resistant bubblers feature chrome-plated integral hood guard to prevent contamination from other users, airborne deposits and tampering.
- Lever-activated bubbler designed so that water never comes in contact with lead-containing materials.
- Built-in adjustable water volume control which regulates flow from 20 psi to 105 psi.
- Heavy chrome plated body with a 1/2" (13mm) straight pipe thread connection.
- Requires single faucet hole.



AMERICAN PRIDE. A LIFETIME TRADITION.
Like your family, the Elkay family has values and traditions that endure. For almost a century, Elkay has been a family-owned and operated company, providing thousands of jobs that support our families and communities.

Product Compliance: ADA & ICC A117.1
ASME A112.18.1/CSA B125.1
NSF 61
NSF 372 (lead free)

C USA

Clean and Care Manual (PDF)
Installation Instructions (PDF)
Limited Warranty (PDF)

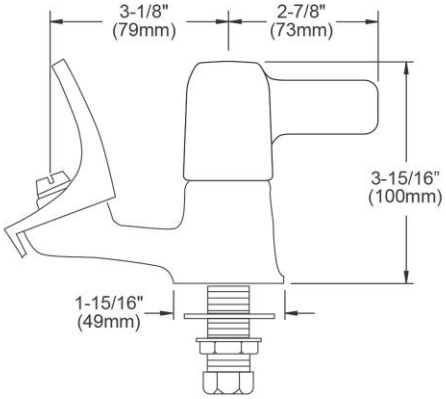

PART:_____QTY: _____

PROJECT:_____

CONTACT:_____

DATE:_____

NOTES:_____

APPROVAL:

In keeping with our policy of continuing product improvement, Elkay reserves the right to change product specifications without notice. Please visit elkay.com for the most current version of Elkay product specification sheets. This specification describes an Elkay product with design, quality, and functional benefits to the user. When making a comparison of other producers' offerings, be certain these features are not overlooked.