CHICAGO FAUCETS®
a Geberit company

2100 South Clearwater Drive
Des Plaines, IL 60018
Phone: 847-803-5000
Fax: 847-803-5454
www.chicagofaucets.com

FOR TECHNICAL ASSISTANCE
1-800-TEC-TRUE (1-800-832-8783)

REPAIR PARTS

BY: SID | DATE: 01-24-19

CHK: DAR | REV:

FITTING NO.
527-GN2AE3-317ABCP

SUBMITTED MODEL NO.

ITEM NO.

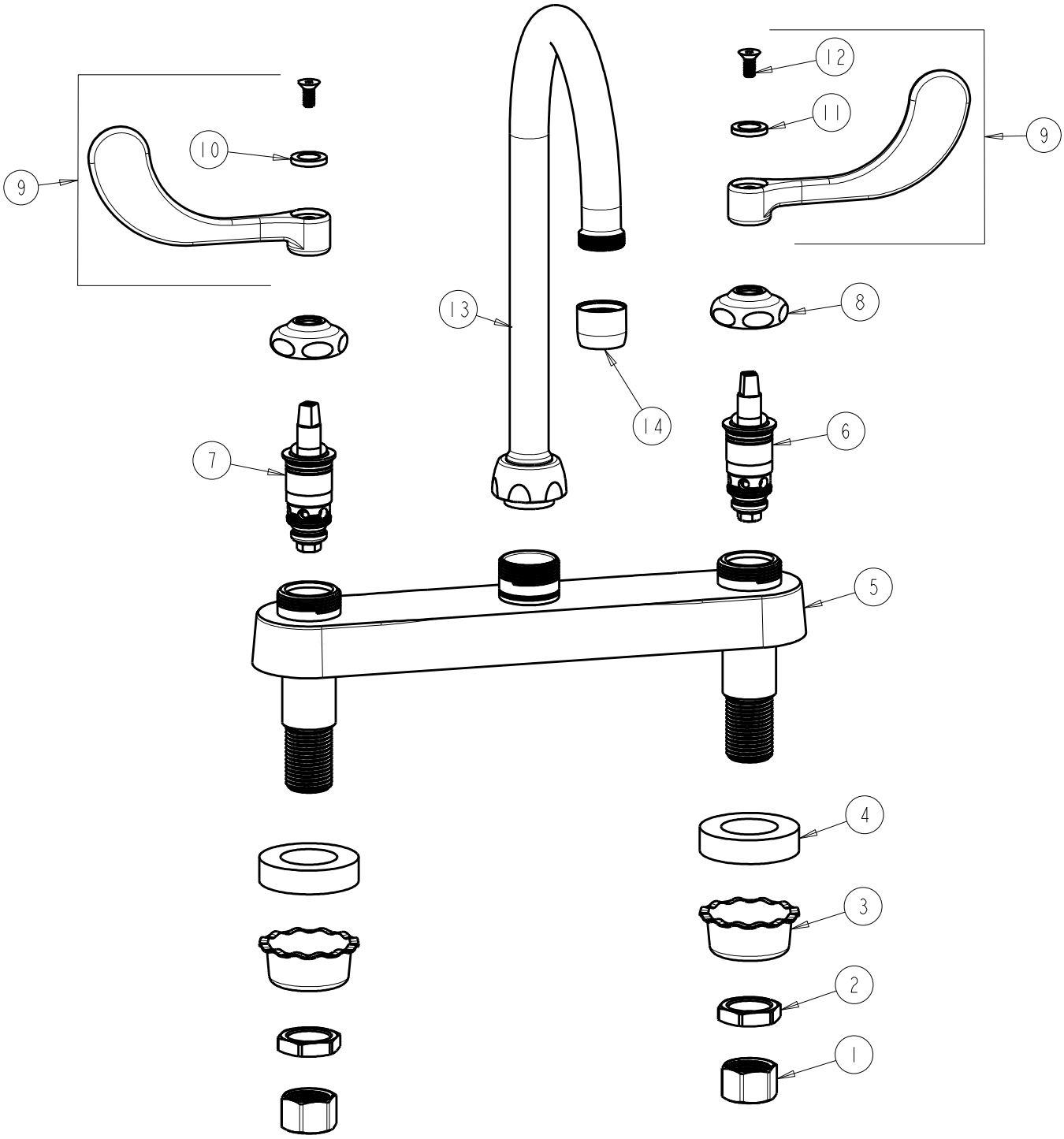

ITEM	PART NO.	DESCRIPTION	ITEM	PART NO.	DESCRIPTION
1	49-005JKRBF	COUPLING NUT	8	1-214JKCP	CAP
2	49-004JKRBF	LOCKNUT	9	317-PRJKCP	HANDLE, 4" WRISTBLADE (PAIR)
3	1797-114JKNF	BASIN COCK WASHER	10	633-023JKNF	INDEX BUTTON (RED)
4	555-313JKNF	WASHER	11	633-123JKNF	INDEX BUTTON (BLUE)
5	------	VALVE BODY (NOT SOLD SEPARATELY)	12	420-020JKNF	SCREW, 1/8 FLAT HEX HEAD X 1/2
6	1-099XTJKABNF	QUATURN CARTRIDGE (RH)	13	GN2AJKABCP	SPOUT, GN 5-1/4" C-C
7	1-100XTJKABNF	QUATURN CARTRIDGE (LH)	14	E3JKABCP	OUTLET, AERATOR 2.2 GPM