CHICAGO FAUCETS®
a Geberit company

2100 South Clearwater Drive
Des Plaines, IL 60018
Phone: 847-803-5000
Fax: 847-803-5454
www.chicagofaucets.com

FOR TECHNICAL ASSISTANCE
1-800-TEC-TRUE (1-800-832-8783)

ROUGH-IN

BY: SID	DATE: 01-06-16
CHK:	REV:

FITTING NO.
2302-200562AB

SUBMITTED MODEL NO.

SUBMITTED AS SHOWN		SUBMITTED AS NOTED		SEE ATTACHED FOR SUBMITTED MODIFICATION	

JOB NAME

ITEM NO.

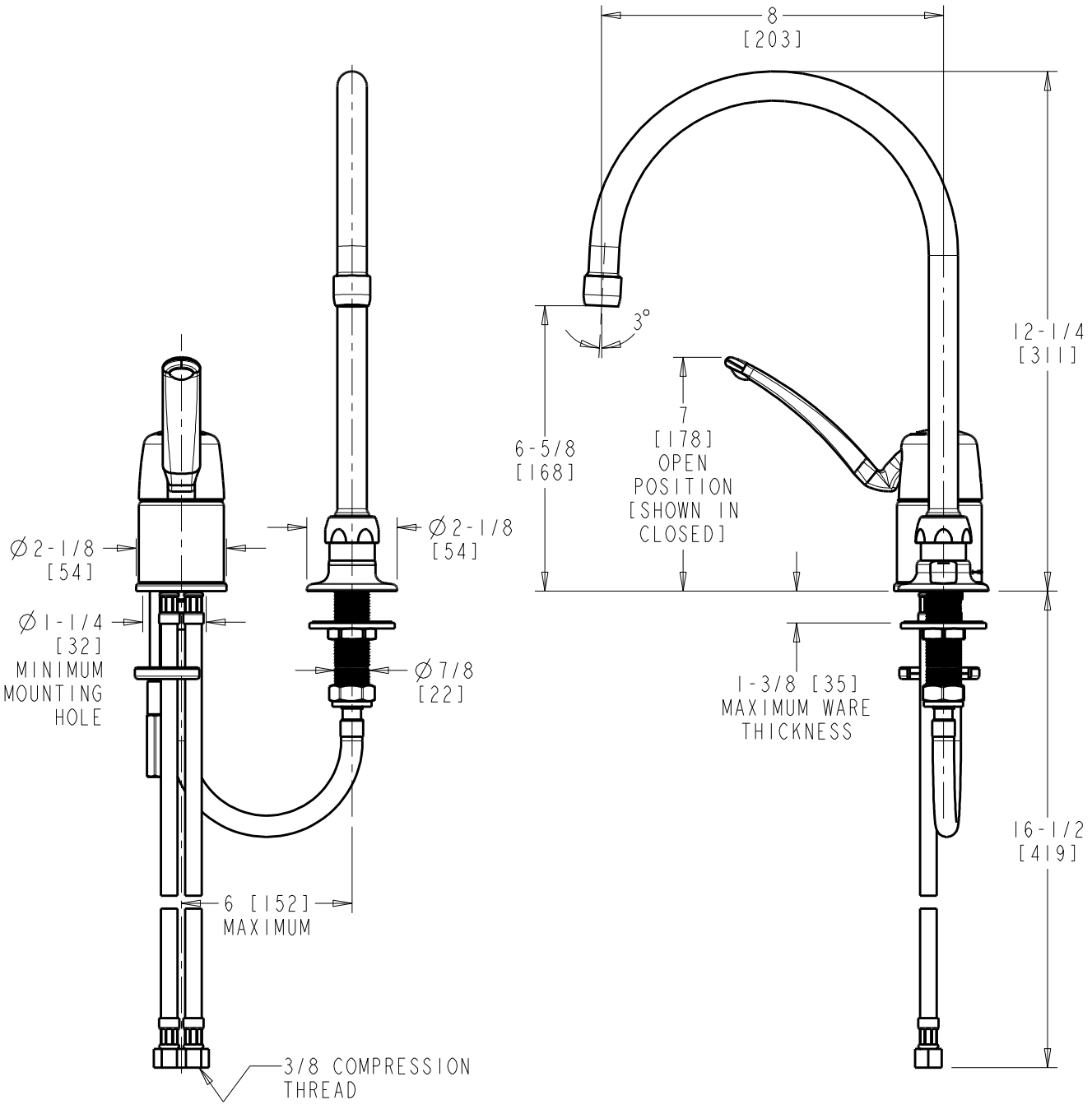

DIMENSIONS ARE IN INCHES AND [MILLIMETERS].

TECHNICAL DATA

- MARATHON DECK MOUNTED FITTING
- GN8A RIGID/SWING GOOSENECK SPOUT
- 4-5/8" METAL LEVER HANDLE
- CERAMIC MIXING CARTRIDGE
- MAX. MIXING ANGLE 120°
- TEMPERATURE LIMIT STOP
- 3/8 COMPRESSION STAINLESS STEEL HOSES
- FINISH: CHROME PLATE
- E36 LAMINAR FLOW OUTLET
- 1.5 GPM [5.7 L/min.] MAXIMUM FLOW RATE
- ASME A112.18.1/CSA B125.1 COMPLIANT
- COMPLIANT TO NSF/ANSI 61, SECTION 9
- MEETS THE LEAD CONTENT REQUIREMENTS OF: CALIFORNIA, VERMONT AND NSF/ANSI 372
- ADA ANSI/CC A117.1 COMPLIANT
- CALGREEN

ADA COMPLIANT

ROUGHING IN DIMENSIONS MAY VARY AND ARE SUBJECT TO CHANGE. NO RESPONSIBILITY IS ASSUMED FOR USE OF SUPERCEDED OR VOIDED DATA.