ROUGHING IN DIMENSIONS MAY VARY AND ARE SUBJECT TO CHANGE. NO RESPONSIBILITY IS ASSUMED FOR USE OF SUPERCEDED OR VOIDED DATA.

CHICAGO FAUCETS®
a Geberit company

2100 South Clearwater Drive
Des Plaines, IL 60018
Phone: 847-803-5000
Fax: 847-803-5454
www.chicagofaucets.com

FOR TECHNICAL ASSISTANCE
1-800-TEC-TRUE (1-800-832-8783)

ROUGH-IN

BY: SID	DATE: 03-02-17
CHK:	REV:

FITTING NO.
540-215565AB

SUBMITTED MODEL NO.

SUBMITTED AS SHOWN		SUBMITTED AS NOTED		SEE ATTACHED FOR SUBMITTED MODIFICATION	

JOB NAME

ITEM NO.

FRONT VIEW

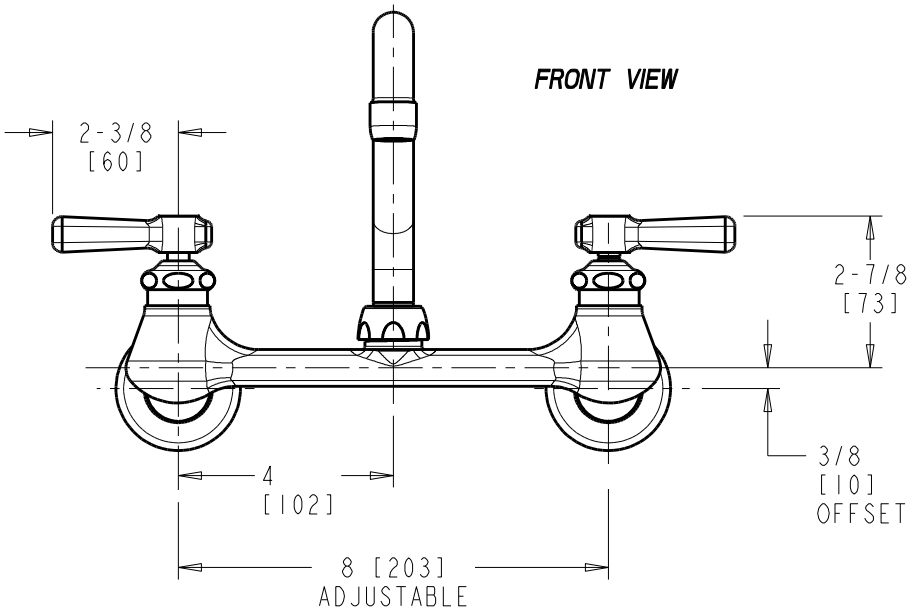

SIDE VIEW

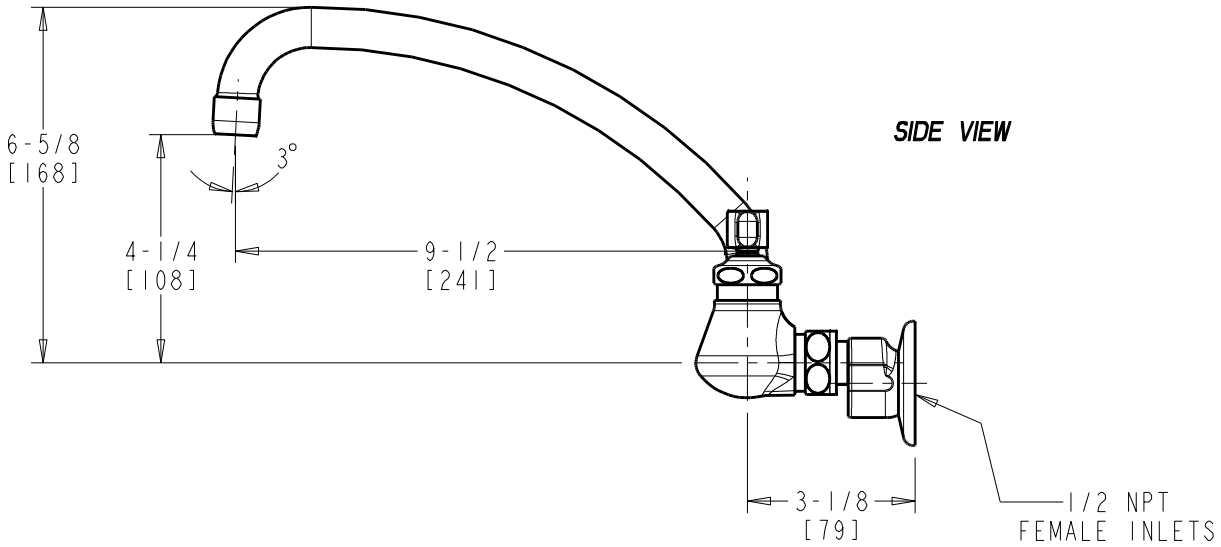

DIMENSIONS ARE IN INCHES AND [MILLIMETERS].

TECHNICAL DATA

- WALL MOUNTED FITTING
- L9 SWING SPOUT
- 369 INDEXED LEVER HANDLES
- QUATURN OPERATING CARTRIDGES
- 'G' OFFSET SUPPLY ARMS
- E36 LAMINAR FLOW OUTLET
- 1.5 GPM [5.7 L/min.] MAXIMUM FLOW RATE
- FINISH: CHROME PLATE
- ASME A112.18.1/CSA B125.1 COMPLIANT
- ADA ANSI/ICC A117.1 COMPLIANT
- COMPLIANT TO NSF/ANSI 61, SECTION 9
- MEETS THE LEAD CONTENT REQUIREMENTS OF: CALIFORNIA, VERMONT AND NSF/ANSI 372
- CALGREEN

ADA COMPLIANT