Repair Parts

512-GXKCABCP

Pot and Kettle Filler

Base Parts:

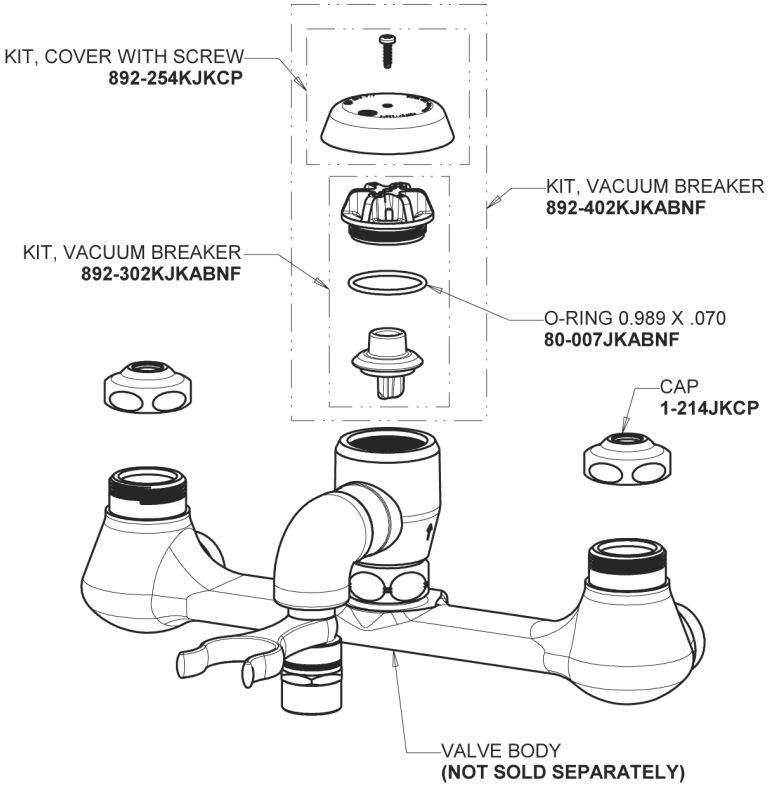

Kettle Filler Valve

90-GNABCP

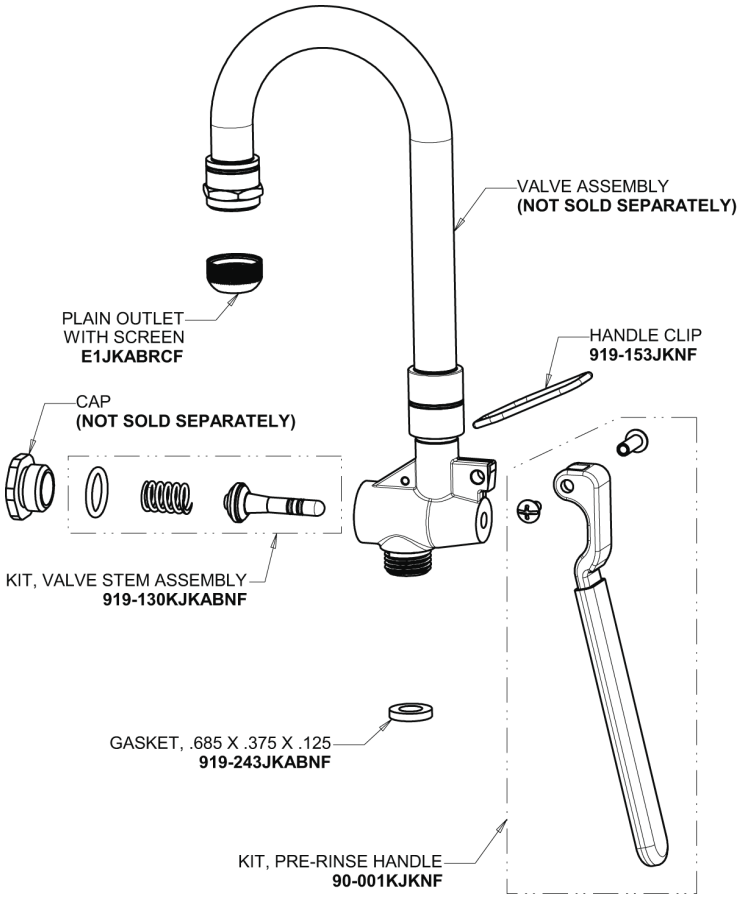

3/8" Offset Inlet Supply Arm

GJKABCP

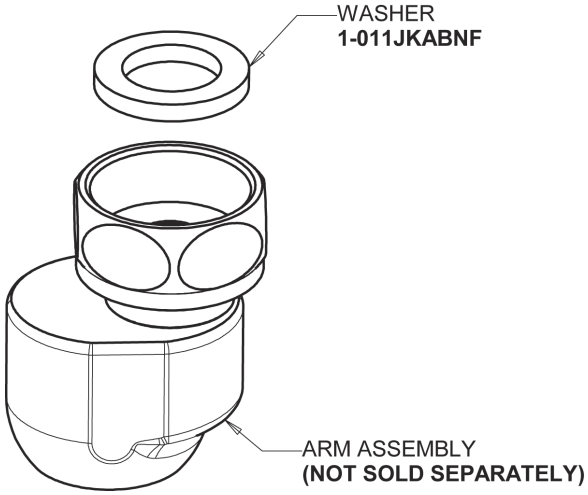

Wall Flange

1-055JKCP

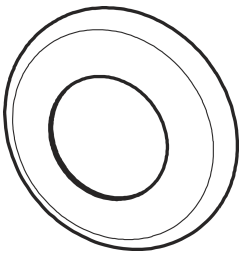

For Technical Assistance:

Phone: 800-TEC-TRUE (832-8783)

Email: techsupport.us@chicagofaucets.com

2100 South Clearwater Drive
Des Plaines, IL 60018
Phone: 847-803-5000
chicagofaucets.com

Repair Parts

512-GXKCABCP

Pot and Kettle Filler

CHICAGO FAUCETS
a Geberit company

Pre-Rinse Hose and Handle Assembly
83-58ABNF

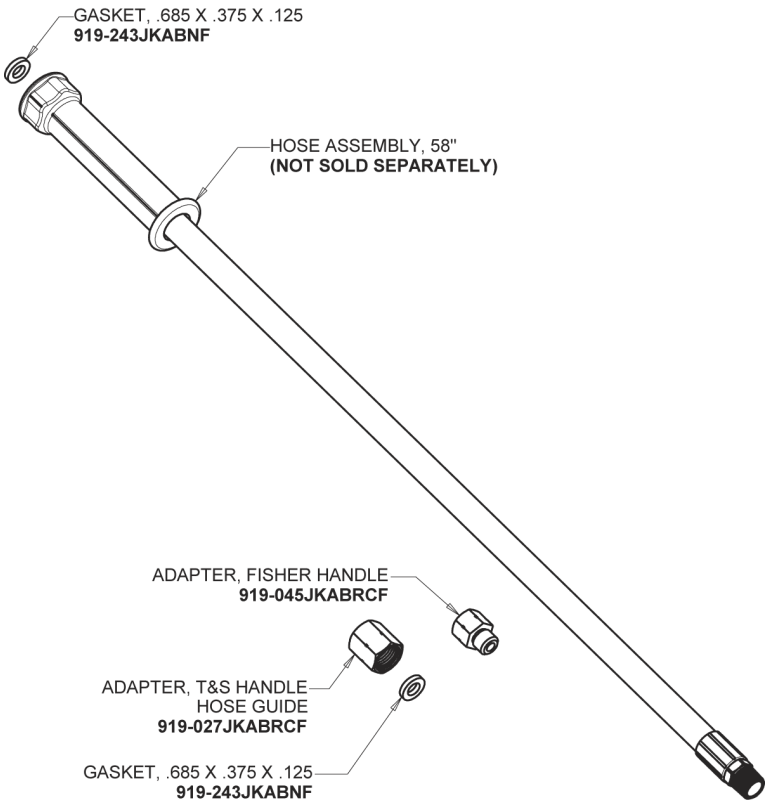

2-3/8" Lever Handle
369-PRJKCP

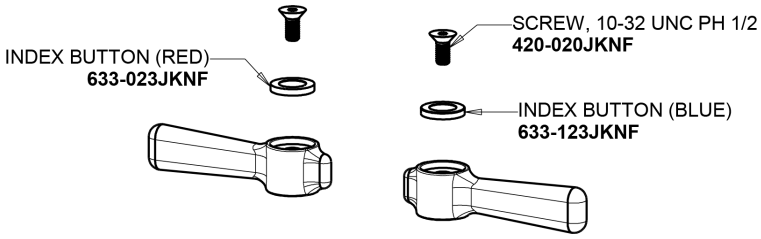

Ceramic 1/4-Turn Cartridge with Check Valve (pair)
1-099XKCJKABNF (right)
1-100XKCJKABNF (left)

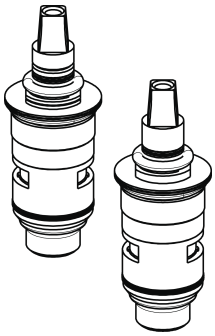

For Technical Assistance:

Phone: 800-TEC-TRUE (832-8783)
Email: techsupport.us@chicagofaucets.com

2100 South Clearwater Drive
Des Plaines, IL 60018
Phone: 847-803-5000
chicagofaucets.com