ROUGHING IN DIMENSIONS MAY VARY AND ARE SUBJECT TO CHANGE. NO RESPONSIBILITY IS ASSUMED FOR USE OF SUPERCEDED OR VOIDED DATA.

CHICAGO FAUCETS®
a Geberit company

2100 South Clearwater Drive
Des Plaines, IL 60018
Phone: 847-803-5000
Fax: 847-803-5454
www.chicagofaucets.com

FOR TECHNICAL ASSISTANCE
1-800-TEC-TRUE (1-800-832-8783)

ROUGH-IN

FITTING NO.	
50-HA8CP	
SUBMITTED MODEL NO.	

BY: SID | DATE: 10-22-09 | CHK: | REV:

SUBMITTED AS SHOWN		SUBMITTED AS NOTED		SEE ATTACHED FOR SUBMITTED MODIFICATION	

JOB NAME | ITEM NO.

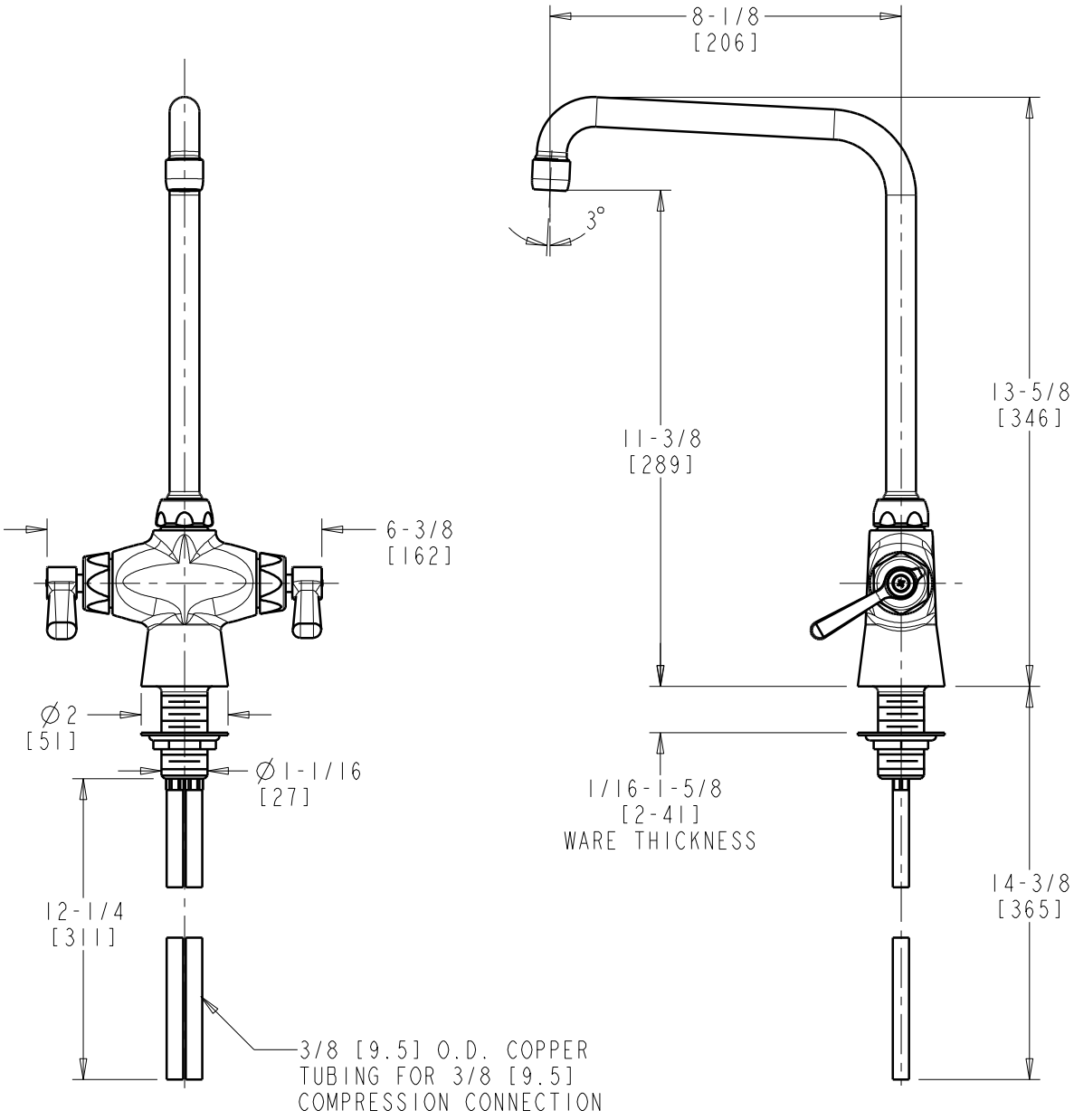

DIMENSIONS ARE IN INCHES AND [MILLIMETERS].

TECHNICAL DATA

- DECK MOUNTED SINK FITTING
- HA8A HIGH ARC RIGID/SWING SPOUT
- 369 INDEXED LEVER HANDLES
- QUATURN OPERATING CARTRIDGES
- FINISH: CHROME PLATE
- E3 SOFTFLO AERATOR OUTLET
- 2.2 GPM [8.3 L/min.] MAXIMUM FLOW RATE
- ASME A112.18.1/CSA B125.1 COMPLIANT
- NSF/ANSI 61 COMPLIANT

ADA COMPLIANT