Climax Metal Products Company
8141 Tyler Boulevard
Mentor, Ohio 44060
USA

Toll free: 800-542-6552
Phone: 440-585-0300
Fax: 800-860-5553
Email: sales@climaxmetal.com
Website: www.climaxmetal.com

ITEM # 1C-193-S, ONE-PIECE CLAMPING COLLAR 1C-SERIES

Stainless Steel One-Piece Clamping Collar. Design fully engages the shaft without marring. Greater axial holding power than set screw collars. Effective on hard & soft shafts.



Drawing | Specifications |

Drawing

Dimensional Drawing

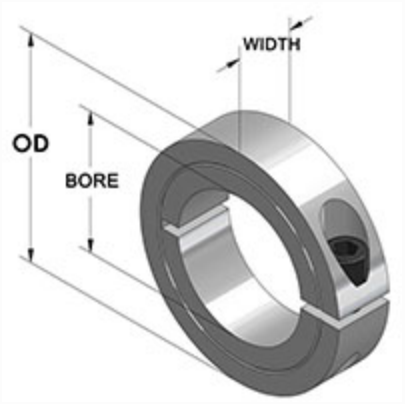

One-Piece Clamping Collar

Specifications

Bore	1 15/16 in
OD	3 in
Width	11/16 in
Style	One-Piece Clamp
Material	Stainless Steel, ASTM A582
Finish	Plain
Clamp Screw	Hex Socket Cap Screw, 3A Thread, Stainless Steel, ASTM F837: 5/16-24 x 1
Recessed Screw	No
Approximate Weight	12.00 oz
UPC Code	044861196564
Downloads	Catalog Page

Competitor Part Number

Alternate Part Number	0402847 101784648 15460 1570305 175D49123 1C193S 242900 242902 242903 2AKP3 35462696 6435K84 7S115 8699039 87988705 CL31SS CL-31-SS