Climax Metal Products Company
8141 Tyler Boulevard
Mentor, Ohio 44060
USA

Toll free: 800-542-6552
Phone: 440-585-0300
Fax: 800-860-5553
Email: sales@climaxmetal.com
Website: www.climaxmetal.com

ITEM # GSC-293-SS, SET SCREW COLLAR GSC-SERIES

Stainless Steel Set Screw Collar. Traditional cost effective collar design.



Drawing | Specifications |

Drawing

Dimensional Drawing

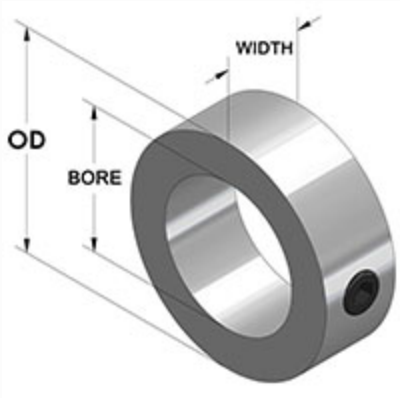

Set Screw Collar

Specifications

Bore	2 15/16 in
OD	4 in
Width	1 1/8 in
Style	Set Screw
Material	Stainless Steel, ASTM A582
Finish	Plain
Set Screw	Hex Socket Set Screw, 3A Thread, Stainless Steel, ASTM F880: 1/2-13 x 1/2
Approximate Weight	29.30 oz
UPC Code	044861635032

Competitor Part Number

Alternate Part Number	105472372 2478177 8563799 ASC293SS GSC293SS SC-293-SS