CHICAGO FAUCETS®
a Geberit company

2100 South Clearwater Drive
Des Plaines, IL 60018
Phone: 847-803-5000
Fax: 847-803-5454
www.chicagofaucets.com

FOR TECHNICAL ASSISTANCE
1-800-TEC-TRUE (1-800-832-8783)

REPAIR PARTS

BY: JAR	DATE: 02-07-17
CHK:	REV:

FITTING NO.
EQ-C1XC_SERIES
SUBMITTED MODEL NO.

ITEM NO.

FINISH OPTIONS
CP=CHROME PLATE
BN=BRUSHED NICKEL

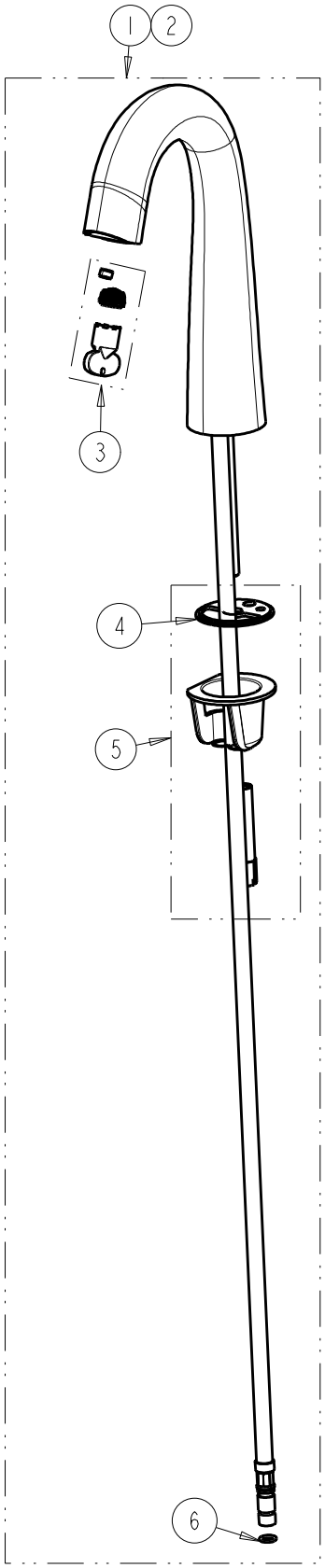

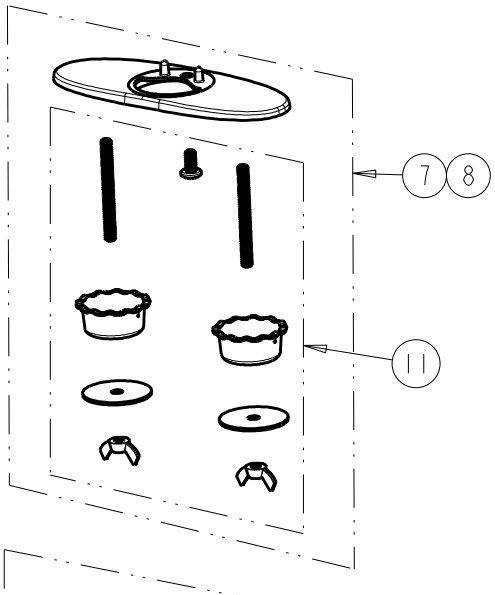

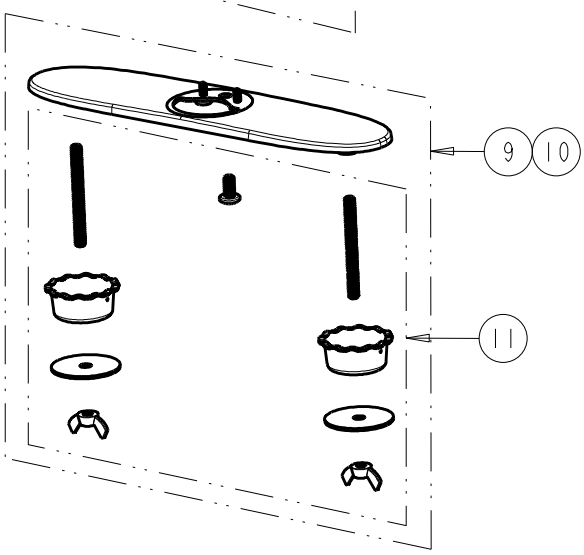

NOTE:
ITEM 4 INCLUDES DECK GASKET FOR EACH SPOUT DESIGN AND HOSE O-RINGS.

ITEM	PART NO.	DESCRIPTION
1	EQ-C11C-KJKABCP	KIT, EQ HIGHARC SPOUT w/ 0.35 GPM
2	EQ-C11C-KJKABBN	KIT, EQ HIGHARC SPOUT w/ 0.35 GPM
3	243.706.00.1	KIT, EQ LOW FLOW SSPS OUTLET/FC CONTROL
4	243.150.AB.1	KIT, SPOUT SEAL EQ SERIES
5	243.149.00.1	KIT, HARDWARE FOR EQ HIGHARC SPOUT
6	------	O-RING #011, DRINKING WATER COMPLIANT
7	EQ-A12-KJKCP	KIT, 4" COVER PLATE - EQ CURVED/HIGHARC
8	EQ-A12-KJKBN	KIT, 4" COVER PLATE - EQ CURVED/HIGHARC
9	EQ-A13-KJKCP	KIT, 8" COVER PLATE - EQ CURVED/HIGHARC
10	EQ-A13-KJKBN	KIT, 8" COVER PLATE - EQ CURVED/HIGHARC
11	243.181.00.1	KIT, HARDWARE FOR EQ COVER PLATES

CHICAGO FAUCETS®
a Geberit company

2100 South Clearwater Drive
Des Plaines, IL 60018
Phone: 847-803-5000
Fax: 847-803-5454
www.chicagofaucets.com

FOR TECHNICAL ASSISTANCE
1-800-TEC-TRUE (1-800-832-8783)

REPAIR PARTS

BY: JAR	DATE: 02-07-17
CHK:	REV:

FITTING NO.
EQ-C-21KJKABNF
SUBMITTED MODEL NO.

ITEM NO.

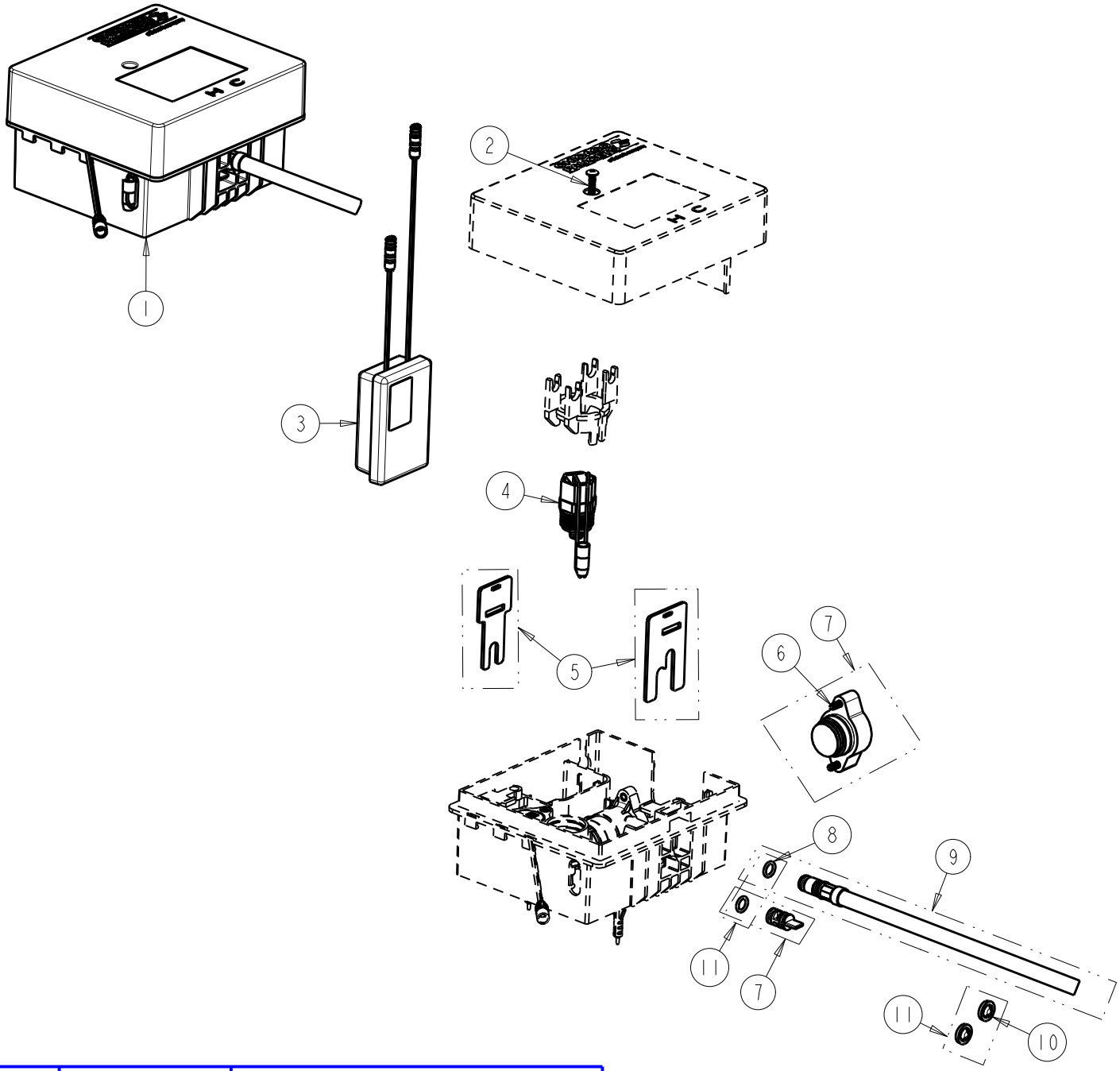

ITEM	PART NO.	DESCRIPTION
1	EQ-C-21KJKABNF	CONTROL BOX ASSY EQ IR SSPS SS NMIX
2	------	SCREW, #8 X 1-1/4" LONG PLASTITE TYPE
3	243.154.00.1	SSPS POWER CELL FOR EQ
4	243.152.AB.1	SOLENOID VALVE, DN5
5	243.158.00.1	CONTROL BOX HARDWARE KIT FOR EQ
6	------	BONNET HEX SCREW, M4x0.7x16mm
7	243.180.AB.1	REBUILD KIT FOR EQ SS NMIX
8	------	O-RING #011, DRINKING WATER COMPLIANT
9	243.157.AB.1	INLET SUPPLY HOSE FOR EQ
10	3300-005JKABNF	FILTER/SCREEN
11	243.159.AB.1	KIT, SEALS AND CHECKS FOR EQ