ROUGHING IN DIMENSIONS MAY VARY AND ARE SUBJECT TO CHANGE. NO RESPONSIBILITY IS ASSUMED FOR USE OF SUPERCEDED OR VOIDED DATA.

CHICAGO FAUCETS®
a Geberit company

2100 South Clearwater Drive
Des Plaines, IL 60018
Phone: 847-803-5000
Fax: 847-803-5454
www.chicagofaucets.com

FOR TECHNICAL ASSISTANCE
1-800-TEC-TRUE (1-800-832-8783)

ROUGH-IN

		FITTING NO. 510-212856AB
BY: JAR	DATE: 05-27-16	SUBMITTED MODEL NO.
CHK: JAR	REV:	

SUBMITTED AS SHOWN		SUBMITTED AS NOTED		SEE ATTACHED FOR SUBMITTED MODIFICATION	

JOB NAME

ITEM NO.

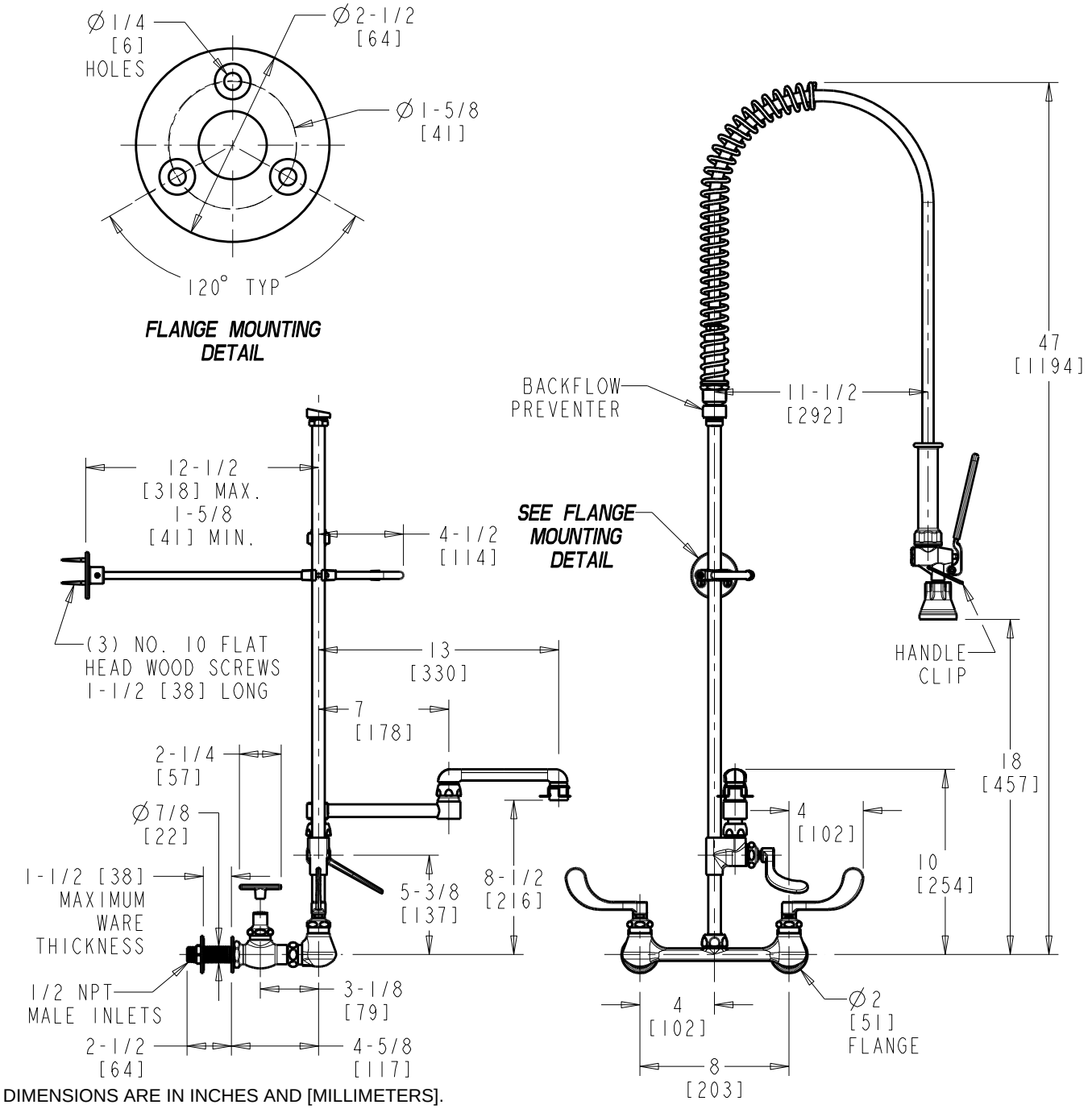

DIMENSIONS ARE IN INCHES AND [MILLIMETERS].

TECHNICAL DATA

- WALL MOUNTED PRE-RINSE SPRAY
- 613-A PRE-RINSE ADAPTA FAUCET
- DJ13 DOUBLE JOINTED SWING SPOUT, E19 ANTI-HOSE OUTLET
- 317 INDEXED WRISTBLADE HANDLES
- CERAMIC DISC OPERATING CARTRIDGES
- 'EC' 1/2" FLANGED FEMALE INLETS WITH INTEGRAL CHECK
- E23 IN-LINE BACKFLOW PREVENTER
- FINISH: CHROME PLATE
- 90-HAB HOSE REEL PRE-RINSE SPRAY VALVE
- 2.5 GPM [9.5 L/min.] MAXIMUM FLOW RATE
- 932-001K INLET SHANK ASSEMBLY
- 44" STAINLESS STEEL HOSE, 23" RISER
- INTEGRATED PIPE SUPPPORT & HOOK ASSEMBLY
- ASME A112.18.1/CSA B125.1 COMPLIANT
- ANSI/ASSE 1012 COMPLIANT, CSA B64.8 COMPLIANT
- COMPLIANT TO NSF/ANSI 61, SECTION 9