ROUGHING IN DIMENSIONS MAY VARY AND ARE SUBJECT TO CHANGE. NO RESPONSIBILITY IS ASSUMED FOR USE OF SUPERCEDED OR VOIDED DATA.

CHICAGO FAUCETS®
a Geberit company

2100 South Clearwater Drive
Des Plaines, IL 60018
Phone: 847-803-5000
Fax: 847-803-5454
www.chicagofaucets.com

**FOR TECHNICAL ASSISTANCE**
1-800-TEC-TRUE (1-800-832-8783)

# ROUGH-IN

FITTING NO.
510-205829AB

BY: SID | DATE: 10-30-14 | SUBMITTED MODEL NO.

CHK: | REV:

| | | | | | |
|---|---|---|---|---|---|
| SUBMITTED AS SHOWN | | SUBMITTED AS NOTED | | SEE ATTACHED FOR SUBMITTED MODIFICATION | |

JOB NAME | ITEM NO.

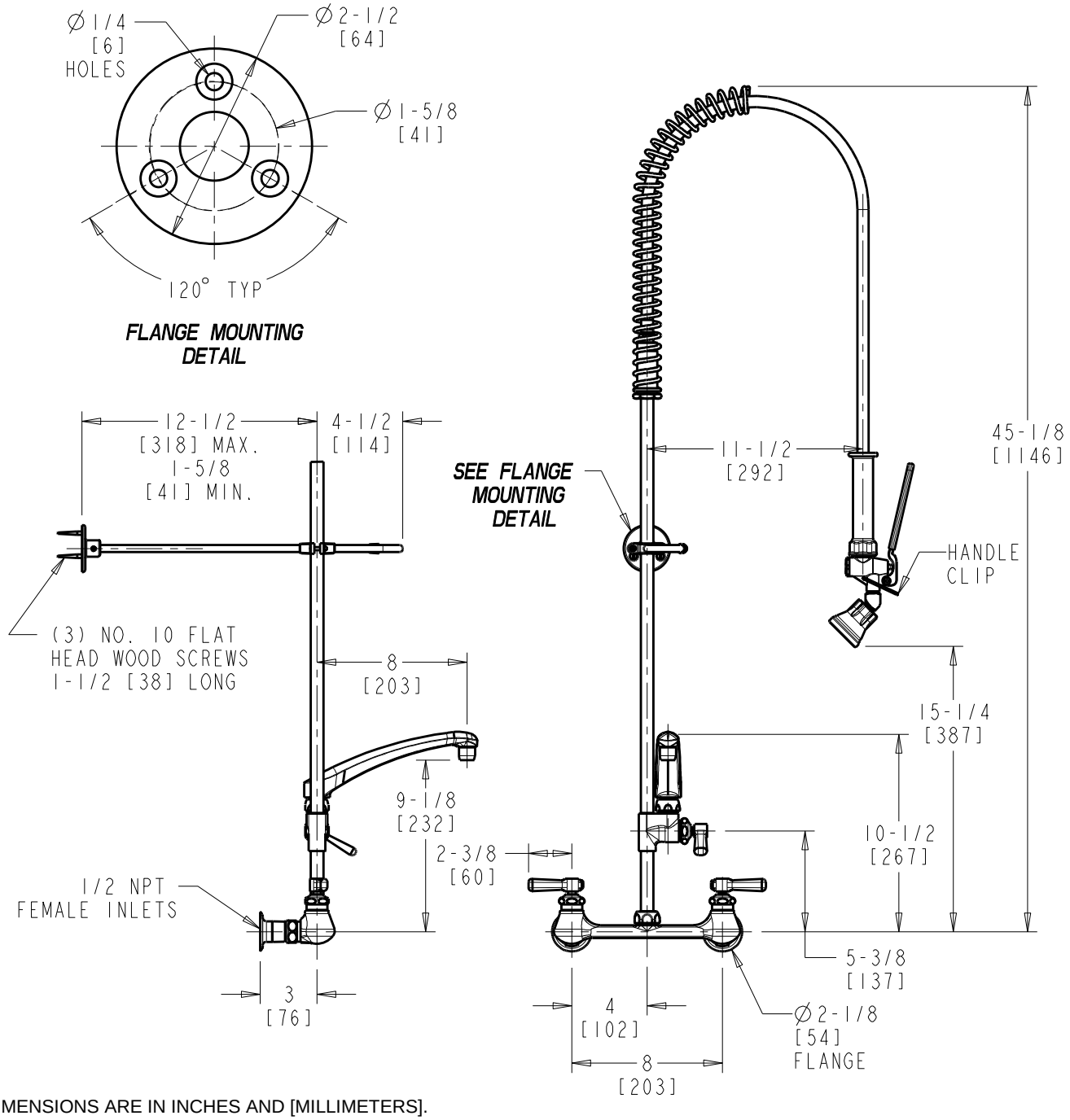


DIMENSIONS ARE IN INCHES AND [MILLIMETERS].

## TECHNICAL DATA

- WALL MOUNTED PRE-RINSE SPRAY
- 613-A ADAPTA FAUCET W/ L8E35 SPOUT
- 369 INDEXED LEVER HANDLES
- CERAMIC DISC OPERATING CARTRIDGES
- 'W' STRAIGHT INLET SUPPLY ARMS
- 90-ANGAB WATER CONSERVING PRE-RINSE SPRAY VALVE
- 1.0 GPM [3.8 L/min.] MAXIMUM FLOW RATE
- FINISH: CHROME PLATE
- 44" STAINLESS STEEL HOSE
- 23" RISER WITH PIPE SUPPORT & HOOK ASSEMBLY
- ASME A112.18.1/CSA B125.1 COMPLIANT
- COMPLIANT TO NSF/ANSI 61, SECTION 9
- MEETS THE LEAD CONTENT REQUIREMENTS OF: CALIFORNIA, VERMONT AND NSF/ANSI 372
- CALGREEN