ROUGHING IN DIMENSIONS MAY VARY AND ARE SUBJECT TO CHANGE. NO RESPONSIBILITY IS ASSUMED FOR USE OF SUPERCEDED OR VOIDED DATA.

CHICAGO FAUCETS®
a Geberit company

2100 South Clearwater Drive
Des Plaines, IL 60018
Phone: 847-803-5000
Fax: 847-803-5454
www.chicagofaucets.com

FOR TECHNICAL ASSISTANCE
1-800-TEC-TRUE (1-800-832-8783)

ROUGH-IN

BY: SID	DATE: 04-07-10
CHK:	REV:

FITTING NO.
540-LD897SWXF633CP

SUBMITTED MODEL NO.

SUBMITTED AS SHOWN		SUBMITTED AS NOTED		SEE ATTACHED FOR SUBMITTED MODIFICATION	

JOB NAME

ITEM NO.

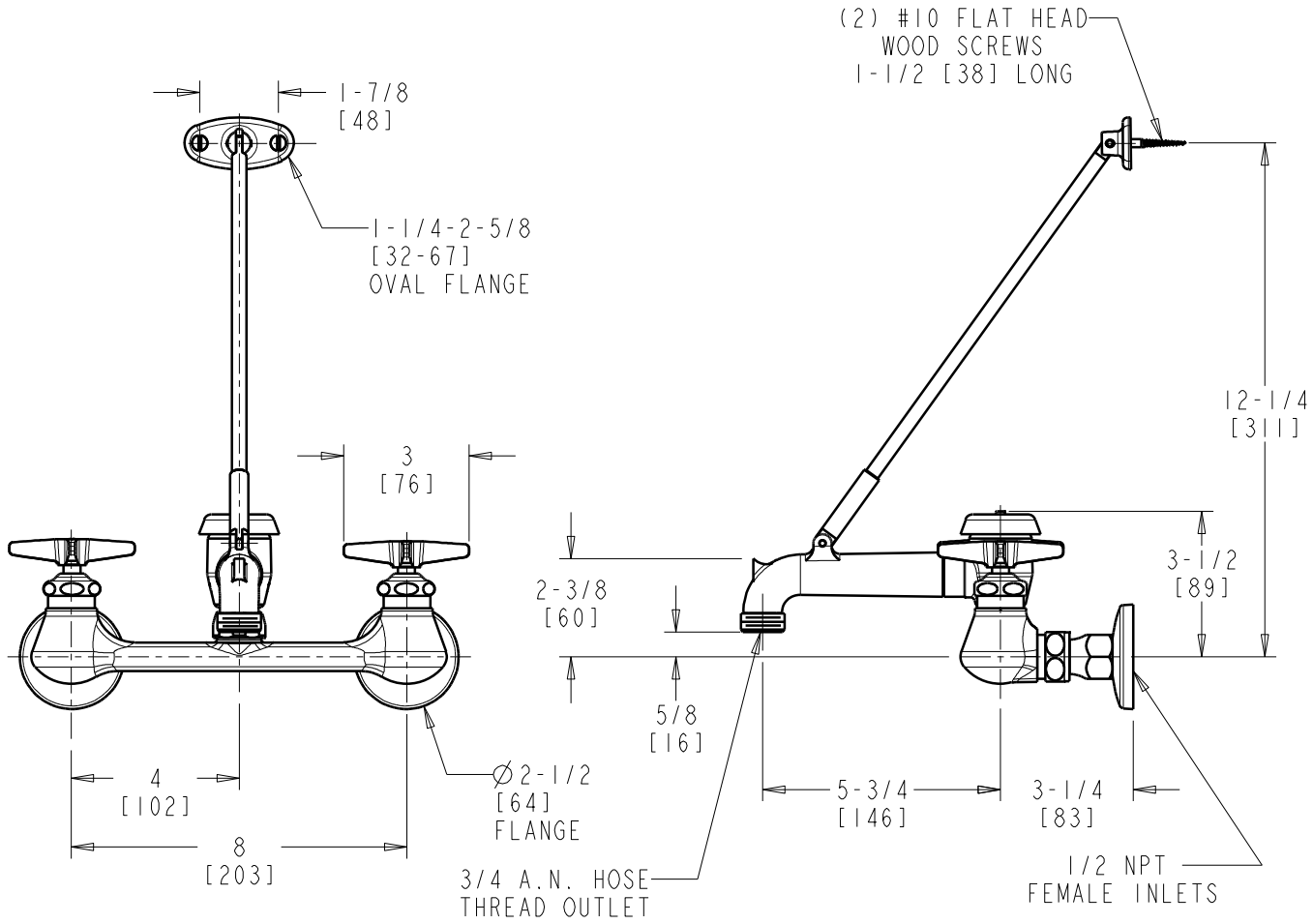

DIMENSIONS ARE IN INCHES AND [MILLIMETERS].

TECHNICAL DATA

- WALL MOUNTED SERVICE SINK FITTING
- 897-S VACUUM BREAKER SPOUT WITH PAIL HOOK AND WALL BRACE
- 633 INDEXED 4 ARM HANDLES
- QUATURN OPERATING CARTRIDGES
- FINISH: CHROME PLATE
- 'WXF' STRAIGHT INLET SUPPLY ARMS WITH WALL FLANGE
- ASME A112.18.1/CSA B125.1 COMPLIANT
- ASSE 1001 COMPLIANT