ROUGHING IN DIMENSIONS MAY VARY AND ARE SUBJECT TO CHANGE. NO RESPONSIBILITY IS ASSUMED FOR USE OF SUPERCEDED OR VOIDED DATA.

CHICAGO FAUCETS®
a Geberit company

2100 South Clearwater Drive
Des Plaines, IL 60018
Phone: 847-803-5000
Fax: 847-803-5454
www.chicagofaucets.com

FOR TECHNICAL ASSISTANCE
1-800-TEC-TRUE (1-800-832-8783)

ROUGH-IN

		FITTING NO. 1895-206332
BY: SID	DATE: 10-05-18	SUBMITTED MODEL NO.
CHK:	REV:	

SUBMITTED AS SHOWN		SUBMITTED AS NOTED		SEE ATTACHED FOR SUBMITTED MODIFICATION	

JOB NAME

ITEM NO.

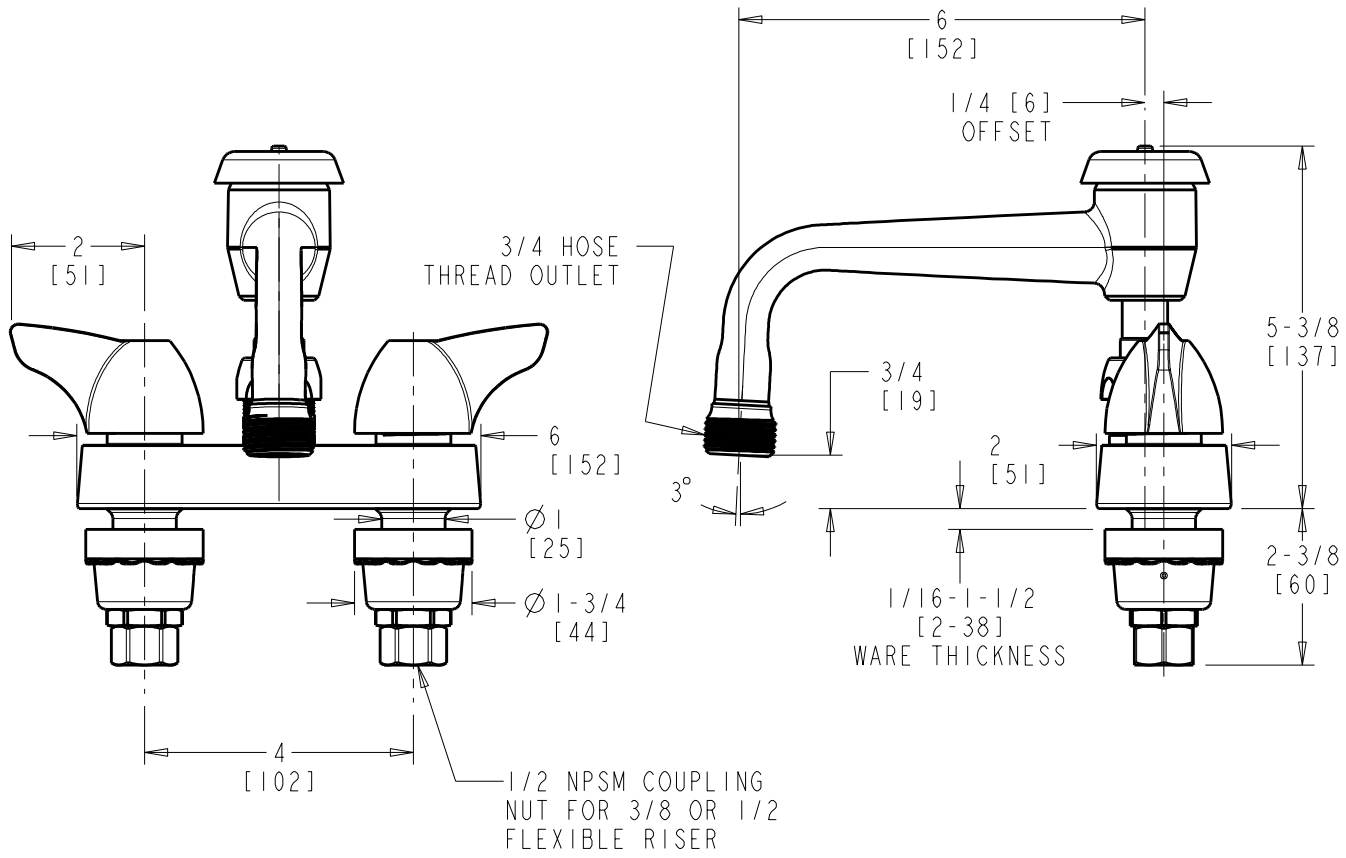

DIMENSIONS ARE IN INCHES AND [MILLIMETERS].

TECHNICAL DATA

- DECK MOUNTED SERVICE SINK FITTING
- L6BVB VACUUM BREAKER SWING SPOUT
- 1000 SINGLE WING INDEXED HANDLES
- QUATURN OPERATING CARTRIDGES
- E2-2 3/4" HOSE THREAD OUTLET WITH ADAPTER
- FINISH: CHROME PLATE

- ASME A112.18.1/CSA B125.1 COMPLIANT
- ADA ANSI/CC A117.1 COMPLIANT
- ASSE 1001 COMPLIANT
- CSA B64.1.1 COMPLIANT

ADA COMPLIANT