CHICAGO FAUCETS®
a Geberit company

2100 South Clearwater Drive
Des Plaines, IL 60018
Phone: 847-803-5000
Fax: 847-803-5454
www.chicagofaucets.com

**FOR TECHNICAL ASSISTANCE**
1-800-TEC-TRUE (1-800-832-8783)

# ROUGH-IN

| | |
|---|---|
| BY: SID | DATE: 05-19-09 |
| CHK: | REV: |

FITTING NO.
786-E29XKABCP

SUBMITTED MODEL NO.

| | | | | | |
|---|---|---|---|---|---|
| SUBMITTED AS SHOWN | | SUBMITTED AS NOTED | | SEE ATTACHED FOR SUBMITTED MODIFICATION | |

JOB NAME

ITEM NO.

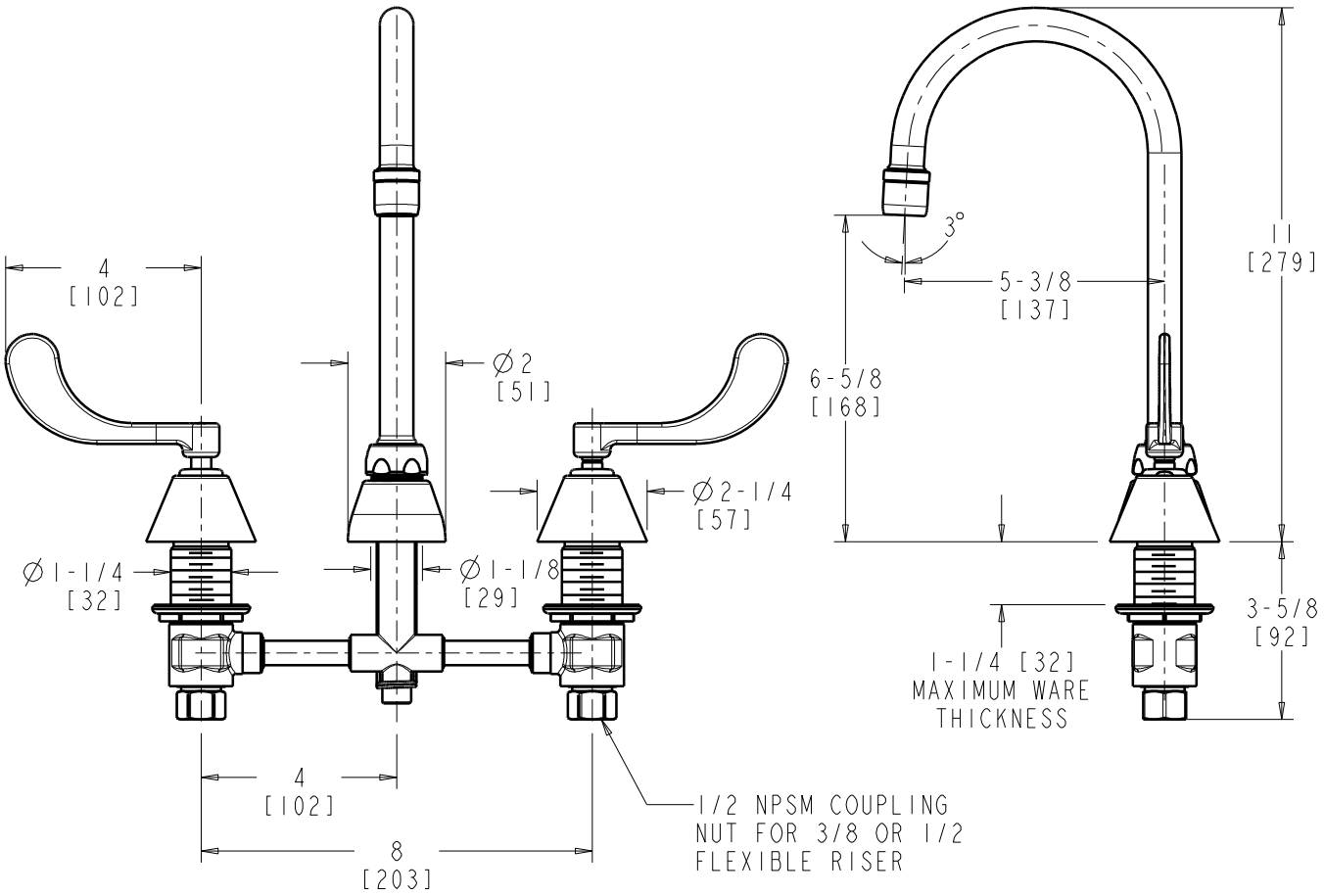


DIMENSIONS ARE IN INCHES AND [MILLIMETERS].

TECHNICAL DATA

- DECK MOUNTED FITTING
- GN2A RIGID/SWING GOOSENECK SPOUT
- 317 INDEXED WRISTBLADE HANDLES
- CERAMIC DISC CARTRIDGES
- FINISH: CROME PLATE
- E29 LAMINAR FLOW OUTLET
- 2.2 GPM [8.3 L/min.] MAXIMUM FLOW RATE
- ASME A112.18.1/CSA B125.1 COMPLIANT
- NSF/ANSI 61 COMPLIANT

ADA COMPLIANT

ROUGHING IN DIMENSIONS MAY VARY AND ARE SUBJECT TO CHANGE. NO RESPONSIBILITY IS ASSUMED FOR USE OF SUPERCEDED OR VOIDED DATA.