ROUGHING IN DIMENSIONS MAY VARY AND ARE SUBJECT TO CHANGE. NO RESPONSIBILITY IS ASSUMED FOR USE OF SUPERCEDED OR VOIDED DATA.

CHICAGO FAUCETS®
a Geberit company

2100 South Clearwater Drive
Des Plaines, IL 60018
Phone: 847-803-5000
Fax: 847-803-5454
www.chicagofaucets.com

FOR TECHNICAL ASSISTANCE
1-800-TEC-TRUE (1-800-832-8783)

ROUGH-IN

FITTING NO.	510-213984AB
BY: JAR	DATE: 08-30-16
SUBMITTED MODEL NO.	
CHK:	REV:

SUBMITTED AS SHOWN		SUBMITTED AS NOTED		SEE ATTACHED FOR SUBMITTED MODIFICATION	

JOB NAME

ITEM NO.

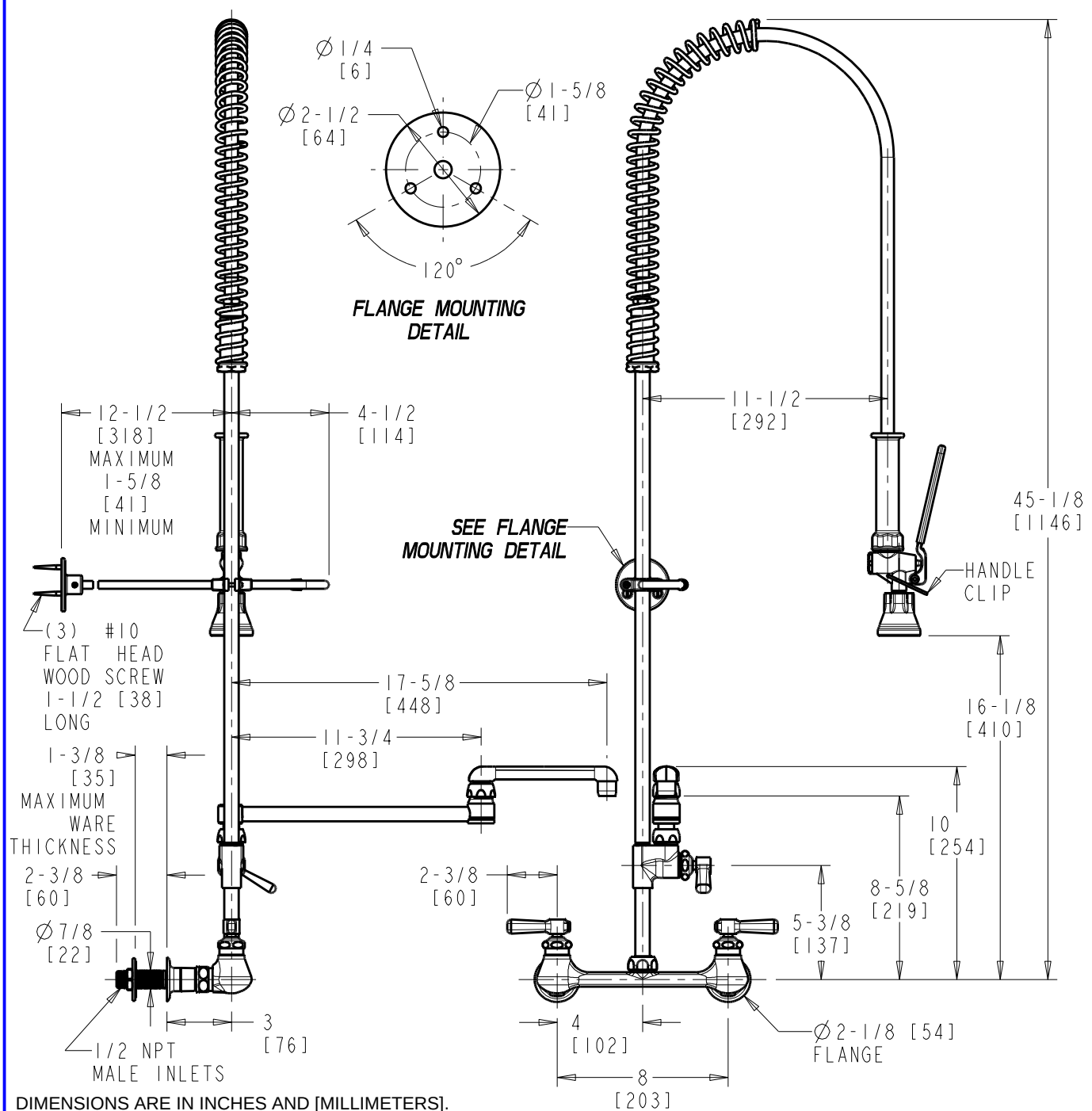

DIMENSIONS ARE IN INCHES AND [MILLIMETERS].

TECHNICAL DATA

- WALL MOUNTED PRE-RINSE SPRAY
- 613-A PRE-RINSE ADAPTA FAUCET W/ DJ18E3 SPOUT, 2.2 GPM [8.3 L/min.] MAXIMUM FLOW RATE
- 369 INDEXED LEVER HANDLES
- QUATURN OPERATING CARTRIDGES
- 'W' STRAIGHT INLET SUPPLY ARMS
- 932-001K INLET SHANK ASSEMBLY
- FINISH: CHROME PLATE
- 90-LAB WATER CONSERVING PRE-RINSE SPRAY VALVE
- 1.0 GPM [3.8 L/min.] MAXIMUM FLOW RATE
- 44" STAINLESS STEEL HOSE
- ASME A112.18.1/CSA B125.1 COMPLIANT
- COMPLIANT TO NSF/ANSI 61, SECTION 9
- MEETS THE LEAD CONTENT REQUIREMENTS OF: CALIFORNIA, VERMONT AND NSF/ANSI 372