MECHANICAL FAUCETS

778-S777-19KCP

Hygiene and Salon Fittings

Product Type

Wall Mounted Single Handle Bed Pan Cleaner Bed Pan Cleaner

Features & Specifications

- Single Handle Bed Pan Cleaner
- 1.5 (5.7 L/min) Spray
- 1/2" NPT Female Thread Inlet with Integral Flange
- 53" White Vinyl Hose with Insulated Handle

Performance Specification

- Rated Operating Pressure: 20-125 PSI
- Rated Operating Temperature: 40-140ºF

Warranty

- Lifetime Limited Faucet Warranty
- 5-Year Limited Cartridge Warranty
- 1-Year Limited Finish Warranty

Codes & Standards

- ASME A112.18.1/CSA B125.1

Job Name _____

Item Number _____

Section/Tag _____

Model Specified _____

Architect _____

Engineer _____

Contractor _____

[ ] Submitted as Shown [ ] Submitted with Variations

Date _____



2100 South Clearwater Drive
Des Plaines, IL
P: 847/803-5000
F: 847/803-5454
Technical: 800/TEC-TRUE
www.chicagofaucets.com

778-S777-19KCP

Hygiene and Salon Fittings

Architect/Engineer Specification

Chicago Faucets No. 778-S777-19KCP, Bed Pan Cleaner with single handle, wall-mounted, chrome plated. Full-flow, 25-degree, male rose spray. 1/2" NPT female thread inlet with integral flange. 53" white vinyl hose with insulated handle.

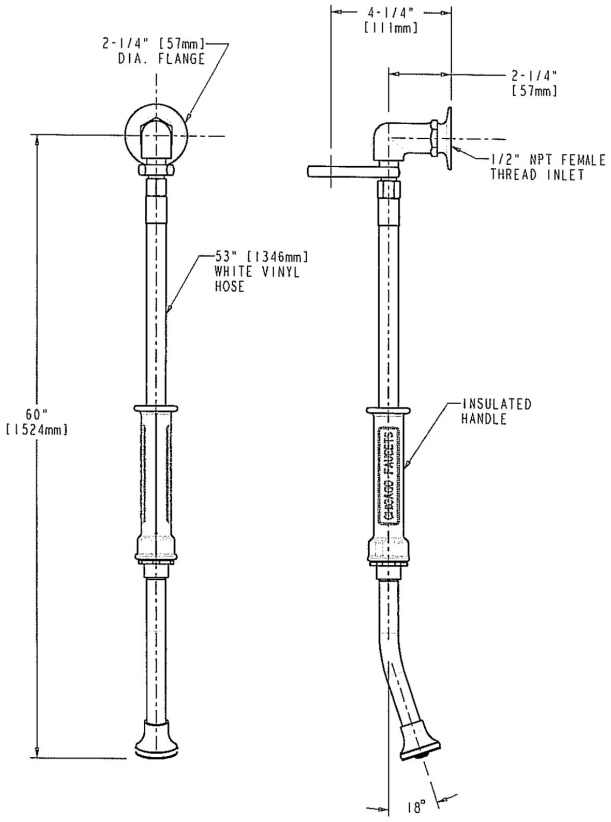

Operation and Maintenance

Installation should be in accordance with local plumbing codes. Flush all pipes thoroughly before installation. After installation, remove spout outlet or flow control and flush faucet thoroughly to clear any debris. Care should be taken when cleaning the product. Do not use abrasive cleaners, chemicals or solvents as they can result in surface damage. Use mild soap and warm water for cleaning and protecting the life of Chicago Faucet products. For specific operation and maintenance refer to the installation instructions and repair parts documents that are located at www.chicagofaucets.com.

Chicago Faucets, member of the Geberit Group, is the leading brand of commercial faucets and fittings in the United States, offering a complete range of products for schools, laboratories, hospitals, office buildings, food service, airports and sport facilities. Call 1.800.TECTRUE or 1.847.803.5000 Option 1 for installation or other technical assistance.

2100 South Clearwater Drive
Des Plaines, IL
P: 847/803-5000
F: 847/803-5454
Technical: 800/TEC-TRUE
www.chicagofaucets.com