ROUGHING IN DIMENSIONS MAY VARY AND ARE SUBJECT TO CHANGE. NO RESPONSIBILITY IS ASSUMED FOR USE OF SUPERCEDED OR VOIDED DATA.

CHICAGO FAUCETS®
a Geberit company

2100 South Clearwater Drive
Des Plaines, IL 60018
Phone: 847-803-5000
Fax: 847-803-5454
www.chicagofaucets.com

FOR TECHNICAL ASSISTANCE
1-800-TEC-TRUE (1-800-832-8783)

ROUGH-IN

FITTING NO.	
2301-206383AB	
BY: SID	DATE: 01-23-15
SUBMITTED MODEL NO.	
CHK: AP	REV:

SUBMITTED AS SHOWN		SUBMITTED AS NOTED		SEE ATTACHED FOR SUBMITTED MODIFICATION	

JOB NAME | ITEM NO.

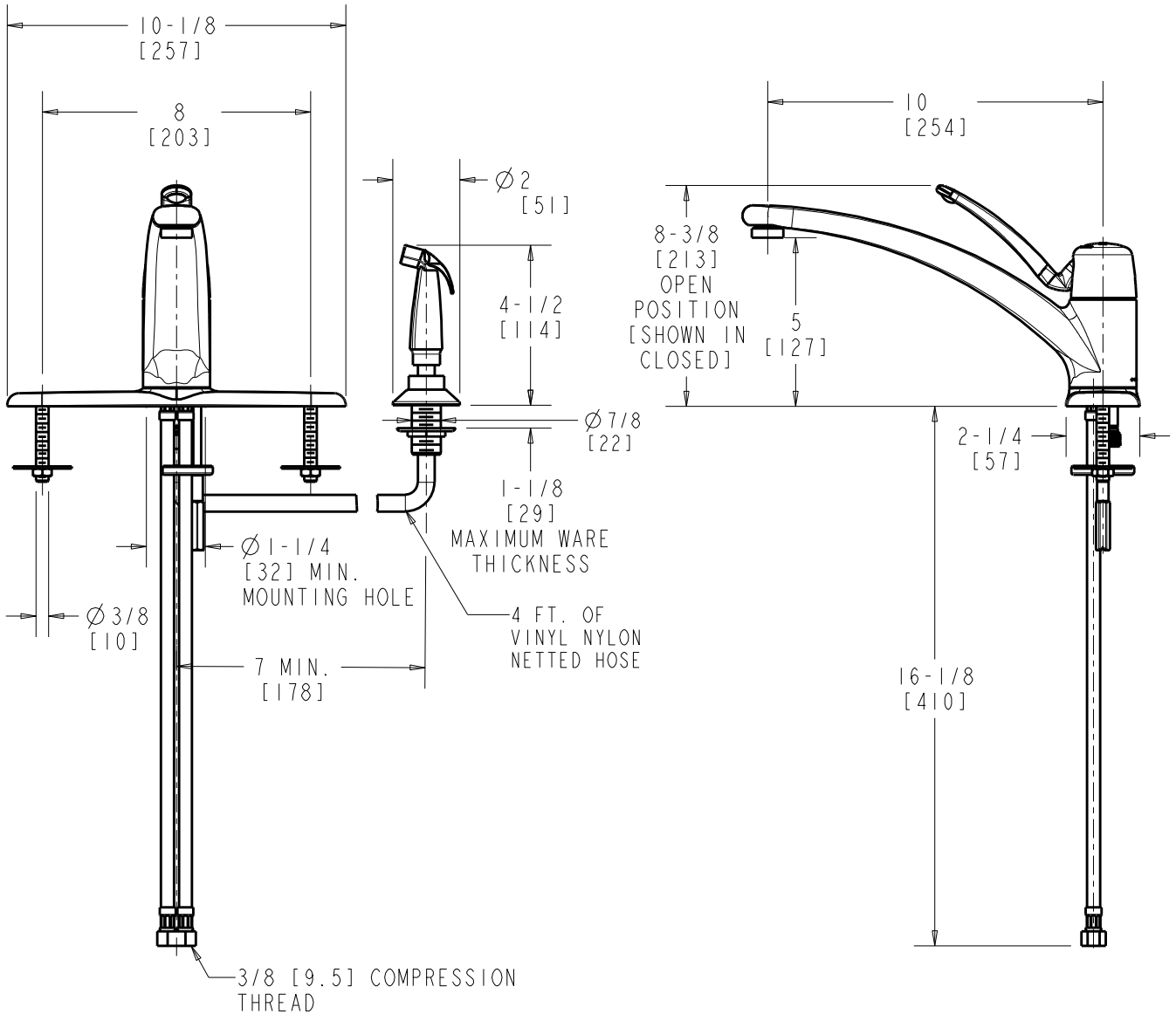

DIMENSIONS ARE IN INCHES AND [MILLIMETERS].

TECHNICAL DATA

- MARATHON DECK MOUNTED FITTING
- 10" CAST BRASS SPOUT
- 4-5/8" METAL LEVER HANDLE
- CERAMIC MIXING CARTRIDGE
- MAX. MIXING ANGLE 120°
- TEMPERATURE LIMIT STOP
- FINISH: CHROME PLATE
- VOLUME CONTROL
- E2805 VANDAL RESISTANT SPRAY OUTLET
- 0.5 GPM [1.9 L/min.] MAXIMUM FLOW RATE
- 10-1/8" X 2-1/4" COVER PLATE
- HOSE AND SPRAY
- ASME A112.18.1/CSA B125.1 COMPLIANT
- ADA ANSI/ICC A117.1 COMPLIANT

ADA COMPLIANT