MECHANICAL FAUCETS

772-L5VBCP

Manual Sink Faucets

Product Type

Deck Mounted 3-3/8" Fixed Centers Hot and Cold Water Sink Faucet

Features & Specifications

- 3-3/8" Fixed Centers
- 5-3/4" L Type Swing Spout with Atmospheric Vacuum Breaker
- 2-3/8" Vandal Proof Lever Handles
- Quaturn Compression Operating Cartridges
- Straight 2" Inlet Supply Arm with Integral Flange
- Atmospheric Vacuum Breaker, Not Intended for Continuous Pressure Applications
- Atmospheric Vacuum Breaker, Not Intended for Continuous Pressure Applications

Performance Specification

- Rated Operating Pressure: 20-125 PSI
- Rated Operating Temperature: 40-140ºF

Warranty

- Lifetime Limited Faucet Warranty
- 5-Year Limited Cartridge Warranty
- 1-Year Limited Finish Warranty

Codes & Standards

- ASME A112.18.1/CSA B125.1
- Certified to NSF/ANSI 61, Section 9 by CSA
- ASSE 1001
- ADA ANSI/ICC A117.1

Job Name _____

Item Number _____

Section/Tag _____

Model Specified _____

Architect _____

Engineer _____

Contractor _____

[ ] Submitted as Shown [ ] Submitted with Variations

Date _____



2100 South Clearwater Drive
Des Plaines, IL
P: 847/803-5000
F: 847/803-5454
Technical: 800/TEC-TRUE
www.chicagofaucets.com

772-L5VBCP

Manual Sink Faucets

Architect/Engineer Specification

Chicago Faucets No. 772-L5VBCP, Sink Faucet for hot and cold water, deck-mounted with 3-3/8" fixed centers, chrome plated. L-Type swing spout with atmospheric vacuum breaker, 5-3/4" center-to-center. 2-3/8" metal, vandal-proof, lever handles with sixteen-point, tapered broach and secured blue and red index buttons. Quaturn™ rebuildable compression cartridge, opens and closes 90°, closes with water pressure, features square, tapered stem. Straight 2" inlet supply arm with integral flange and 1/2" NPT female thread inlet. NOTE: Atmospheric vacuum breaker is NOT intended for continuous pressure applications. This product meets ADA ANSI/ICC A117.1 requirements and is tested and certified to industry standards: ASME A112.18.1/CSA B125.1, Certified to NSF/ANSI 61, Section 9 by CSA, and ASSE 1001.

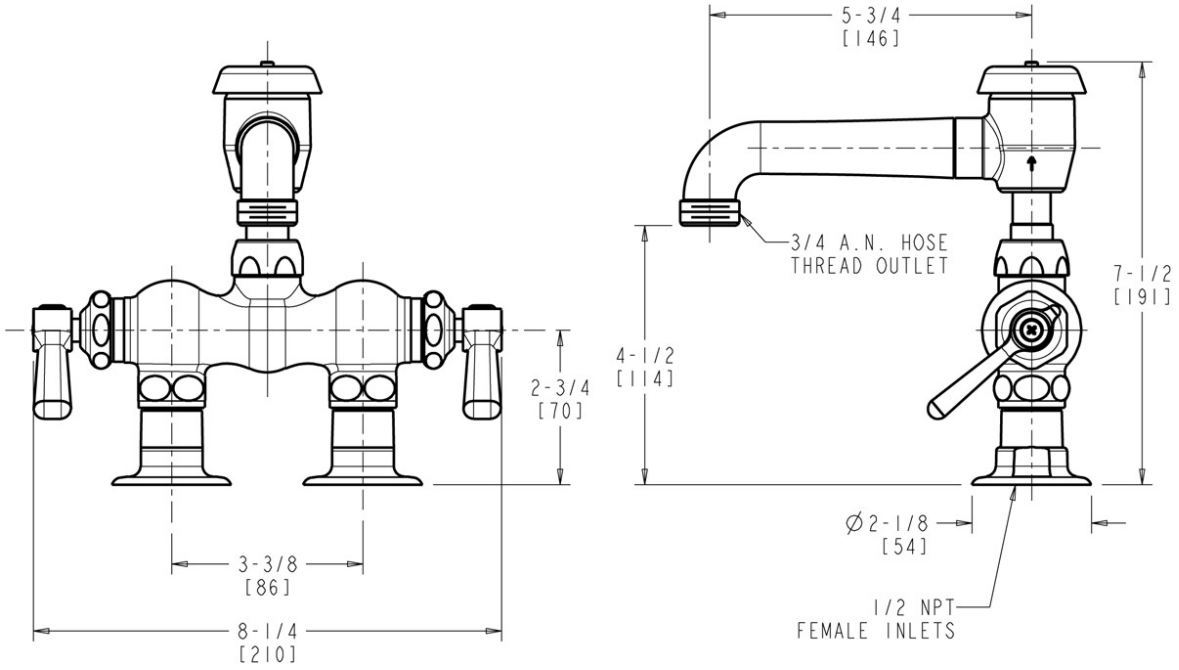

Operation and Maintenance

Installation should be in accordance with local plumbing codes. Flush all pipes thoroughly before installation. After installation, remove spout outlet or flow control and flush faucet thoroughly to clear any debris. Care should be taken when cleaning the product. Do not use abrasive cleaners, chemicals or solvents as they can result in surface damage. Use mild soap and warm water for cleaning and protecting the life of Chicago Faucet products. For specific operation and maintenance refer to the installation instructions and repair parts documents that are located at www.chicagofaucets.com.

Chicago Faucets, member of the Geberit Group, is the leading brand of commercial faucets and fittings in the United States, offering a complete range of products for schools, laboratories, hospitals, office buildings, food service, airports and sport facilities. Call 1.800.TECTRUE or 1.847.803.5000 Option 1 for installation or other technical assistance.

2100 South Clearwater Drive
Des Plaines, IL
P: 847/803-5000
F: 847/803-5454
Technical: 800/TEC-TRUE
www.chicagofaucets.com