MECHANICAL FAUCETS

W8W-L9E35-317ABCP

Manual Sink Faucets

Product Type

Wall Mounted 8" Fixed Centers Hot and Cold Water Workboard Sink Faucet

Features & Specifications

- 8" Fixed Centers
- 9-1/2" L Type Swing Spout
- 1.5 GPM (5.7 L/min) Aerator
- 4" Vandal Proof Wristblade Handles
- Ceramic 1/4 Turn Operating Cartridges
- 1/2" NPSM Supply Inlets
- 520-001KJKABRBF Supply Elbows Recommended for Mounting to a Stainless Steel Backsplash (Order Separately)
- ECAST® design provides durable construction with total lead content equal to or less than 0.25% by weighted average

Performance Specification

- Rated Operating Pressure: 20-125 PSI
- Rated Operating Temperature: 40-140ºF

Warranty

- Lifetime Limited Faucet Warranty
- 5-Year Limited Cartridge Warranty
- 1-Year Limited Finish Warranty

Codes & Standards

- ASME A112.18.1/CSA B125.1
- Certified to NSF/ANSI 61, Section 9 by CSA
- California Health and Safety Code 116875 (AB1953-2006)
- Vermont Bill S.152
- NSF/ANSI 372 Low Lead Content
- ADA ANSI/ICC A117.1
- CALGreen

Job Name _____

Item Number _____

Section/Tag _____

Model Specified _____

Architect _____

Engineer _____

Contractor _____

[ ] Submitted as Shown [ ] Submitted with Variations

Date _____



ECAST

ECAST products are intended for installation where state laws and local codes mandate lead content levels or in any location where lead content is a concern.

2100 South Clearwater Drive
Des Plaines, IL
P: 847/803-5000
F: 847/803-5454
Technical: 800/TEC-TRUE
www.chicagofaucets.com

W8W-L9E35-317ABCP

Manual Sink Faucets

Architect/Engineer Specification

Chicago Faucets No. W8W-L9E35-317ABCP, Workboard Sink Faucet for hot and cold water, wall-mounted with 8" fixed centers, chrome plated. L-Type swing spout, 9-1/2" center-to-center. 1.5 GPM (5.7 L/min) pressure compensating Softflo aerator. 4" metal, vandal-proof, wristblade handles with sixteen-point, tapered broach and secured blue and red index buttons. Ceramic quarter-turn cartridge, features square, tapered stem. 1/2" NPSM supply inlets. ECAST® construction with less than 0.25% lead content by weighted average. CALGreen compliant. This product meets ADA ANSI/ICC A117.1 requirements and is tested and certified to industry standards: ASME A112.18.1/CSA B125.1, Certified to NSF/ANSI 61, Section 9 by CSA, California Health and Safety Code 116875 (AB1953-2006), Vermont Bill S.152, NSF/ANSI 372 Low Lead Content, and California Green Building Standards Code (CALGreen).

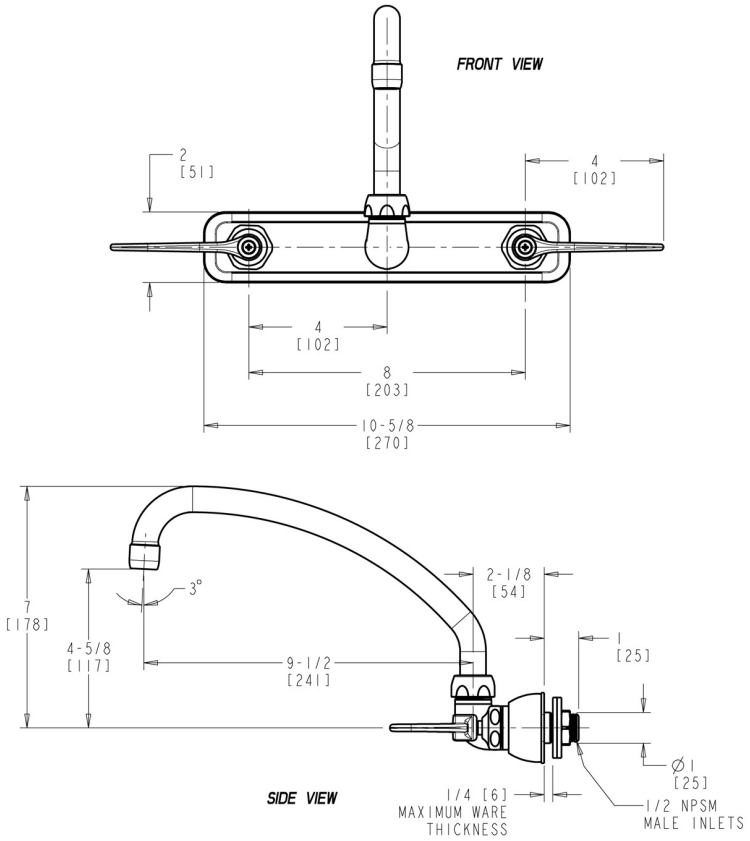

Operation and Maintenance

Installation should be in accordance with local plumbing codes. Flush all pipes thoroughly before installation. After installation, remove spout outlet or flow control and flush faucet thoroughly to clear any debris. Care should be taken when cleaning the product. Do not use abrasive cleaners, chemicals or solvents as they can result in surface damage. Use mild soap and warm water for cleaning and protecting the life of Chicago Faucet products. For specific operation and maintenance refer to the installation instructions and repair parts documents that are located at www.chicagofaucets.com.

Chicago Faucets, member of the Geberit Group, is the leading brand of commercial faucets and fittings in the United States, offering a complete range of products for schools, laboratories, hospitals, office buildings, food service, airports and sport facilities. Call 1.800.TECTRUE or 1.847.803.5000 Option 1 for installation or other technical assistance.

2100 South Clearwater Drive
Des Plaines, IL
P: 847/803-5000
F: 847/803-5454
Technical: 800/TEC-TRUE
www.chicagofaucets.com