Repair Parts

923-GVB204WSXKCAB
Pre-Rinse Fitting

CHICAGO FAUCETS
a Geberit company

Base for 923 Series fittings
Base Parts:

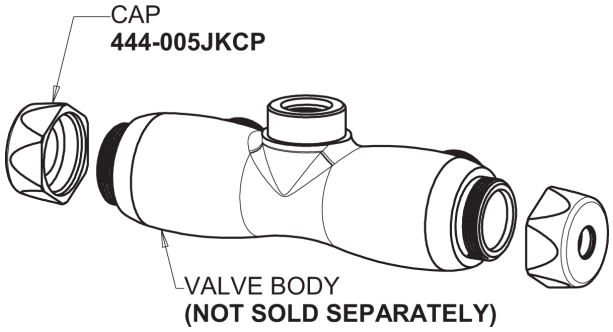

4-Arm Handle
204-PRJKCP

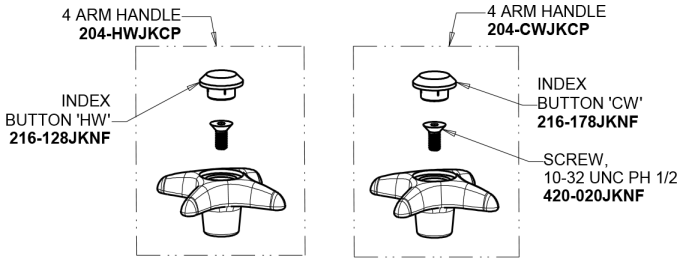

Ceramic 1/4-Turn Cartridge with Check Valve (pair)
1-099XKCJKABNF (right)
1-100XKCJKABNF (left)

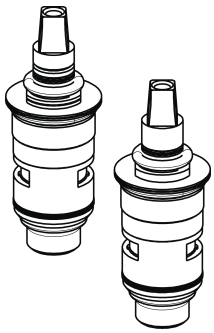

Pre-Rinse Assembly
919-SVBLEAABCP

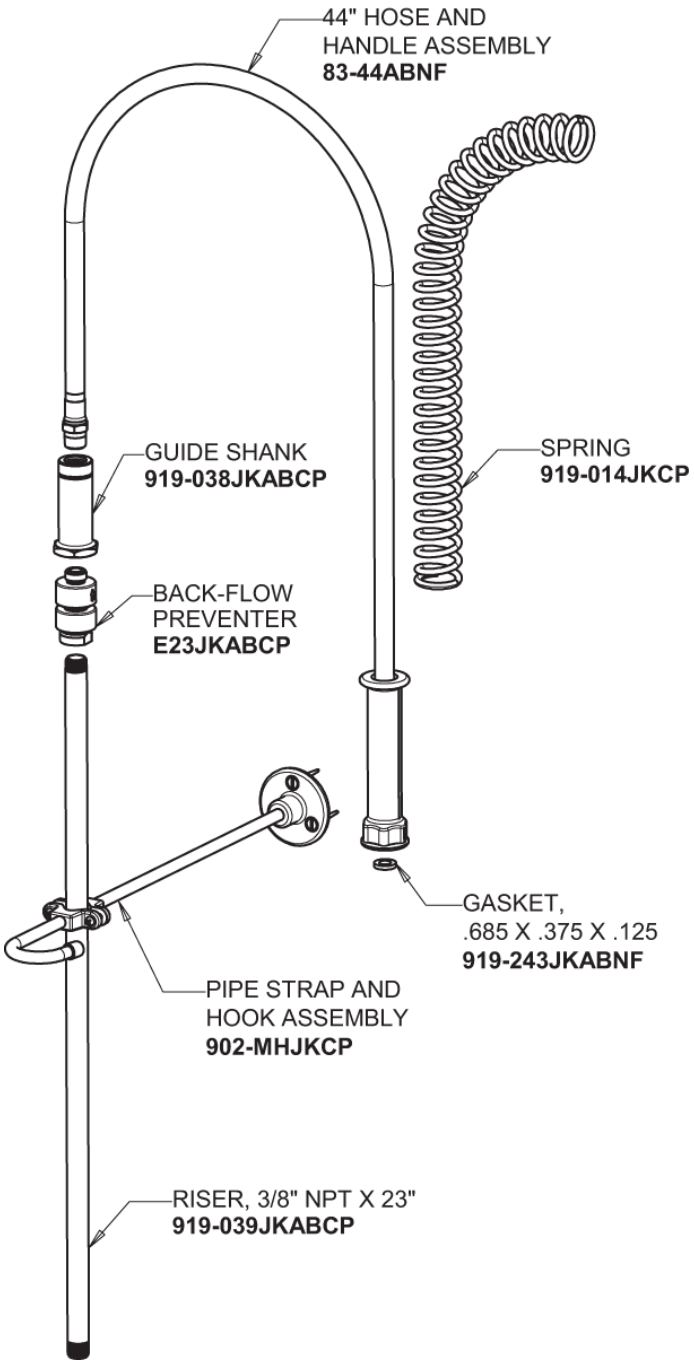

For Technical Assistance:

Phone: 800-TEC-TRUE (832-8783)
Email: techsupport.us@chicagofaucets.com

2100 South Clearwater Drive
Des Plaines, IL 60018
Phone: 847-803-5000
chicagofaucets.com

Repair Parts

923-GVB204WSXKCAB

Pre-Rinse Fitting

CHICAGO FAUCETS
a Geberit company

Pre-Rinse Spray Valve
90-LABCP

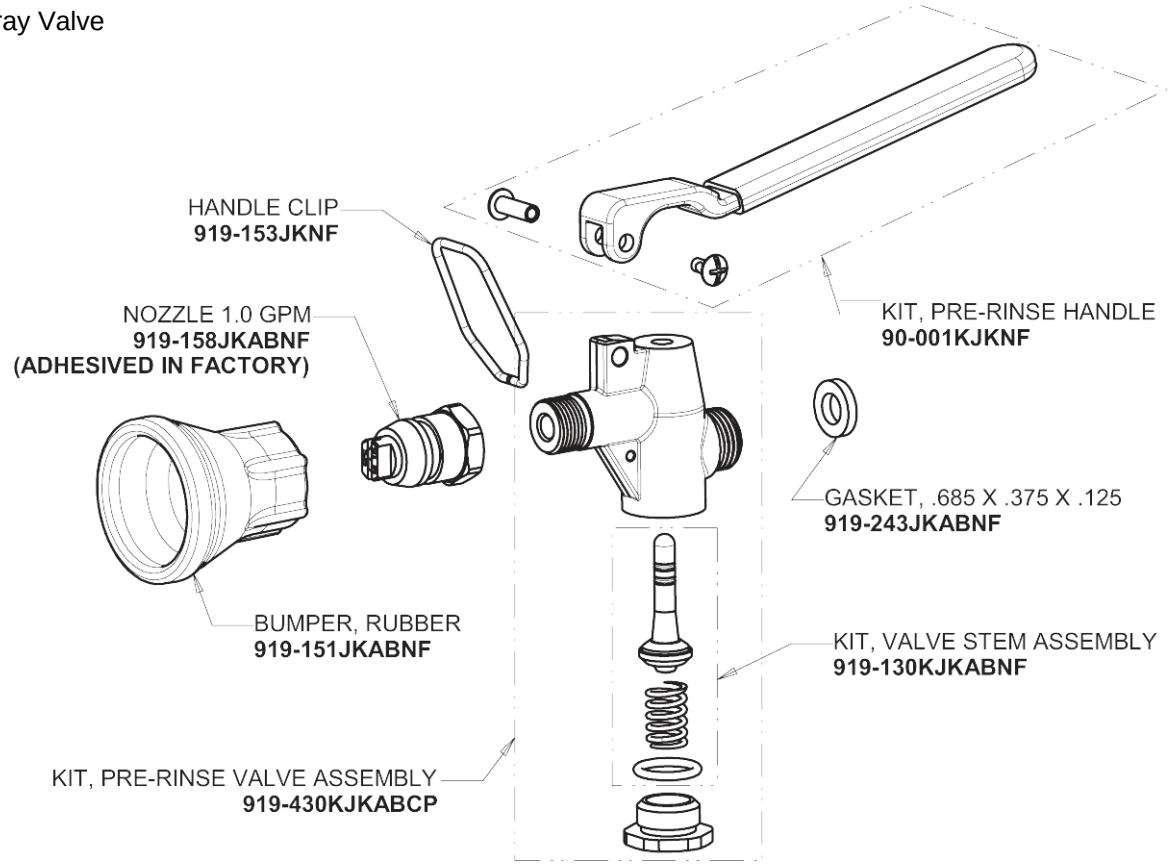

Shank Assembly
932-001KJKABRBF

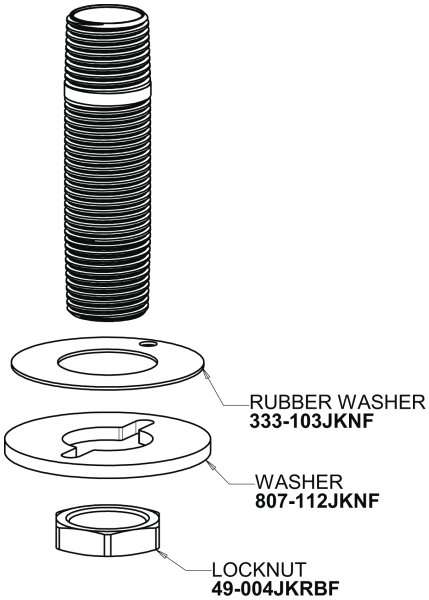

Wall Flange
1-055JKCP

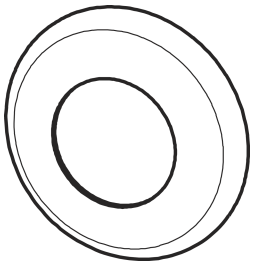

3/8" Offset Inlet Supply Arm
GJKABCP

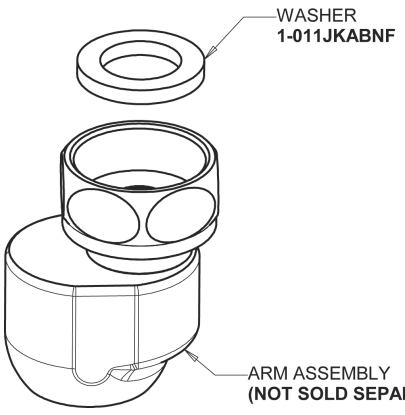

For Technical Assistance:

Phone: 800-TEC-TRUE (832-8783)
Email: techsupport.us@chicagofaucets.com

2100 South Clearwater Drive
Des Plaines, IL 60018
Phone: 847-803-5000
chicagofaucets.com