Pre-Rinse Fittings
923-GVB204WSXKCAB

CHICAGO FAUCETS
Geberit Group

Product Type

Pre-rinse fitting with adjustable centers

Features & Specifications

- 2-5/16" diameter slip flange
- 3-3/8" body, adjustable arms 3" - 4-1/8" centers
- Vandal Proof 2-1/2" cross handle
- Ceramic 1/4-turn operating cartridge with integrated check valve, right-hand
- Ceramic 1/4-turn operating cartridge with integrated check valve, left-hand
- ECAST® design provides durable construction with total lead content equal to or less than 0.25% by weighted average
- Complies with the requirements of the Buy American Act of 1933.

Performance Specification

- Rated Operating Pressure: 20-125 PSI
- Rated Operating Temperature: 40-140°F

Warranty

- 5-Year Limited Cartridge Warranty
- Lifetime Limited Faucet Warranty
- 1-Year Limited Finish Warranty

Codes & Standards

- NSF/ANSI 372 Low Lead Content
- Certified to NSF/ANSI 61, Section 9
- WARNING: This product can expose you to lead, which is known to the State of California to cause cancer and birth defects or other reproductive harm. For more information go to www.P65Warnings.ca.gov.

Job Name _____

Item Number _____

Section/Tag _____

Model Specified _____

Architect _____

Engineer _____

Contractor _____

[ ] Submitted as Shown [ ] Submitted with Variations

Date _____



ECAST

ECAST products are intended for installation where state laws and local codes mandate lead content levels or in any location where lead content is a concern.

2100 South Clearwater Drive
Des Plaines, IL
P: 847/803-5000
F: 847/803-5454
Technical: 800/TEC-TRUE
www.chicagofaucets.com

923-GVB204WSXKCAB

Architect/Engineer Specification

Chicago Faucets No. 923-GVB204WSXKCAB, Pre-Rinse Fitting, wall-mounted with adjustable arms for 3" - 4-1/8" centers, chrome plated. Water conserving pre-rinse spray valve, 1.0 GPM @ 60 PSI. 2-1/2" metal, vandal-proof, cross handles with eight-point, tapered broach and secured green and red index buttons. Ceramic quarter-turn cartridge with integrated check valve, features square, tapered stem. 3/8" offset inlet supply arm with integral check with 1/2" NPT female thread inlets, 1/2" NPT male threaded inlet shanks with mounting hardware. 2-5/16" diameter slip flange. 23" riser with spring guide. in-line vacuum breaker, 44" flexible stainless steel hose with insulated handle. Pipe strap and hook assembly. ECAST®¬® construction with less than 0.25% lead content by weighted average.

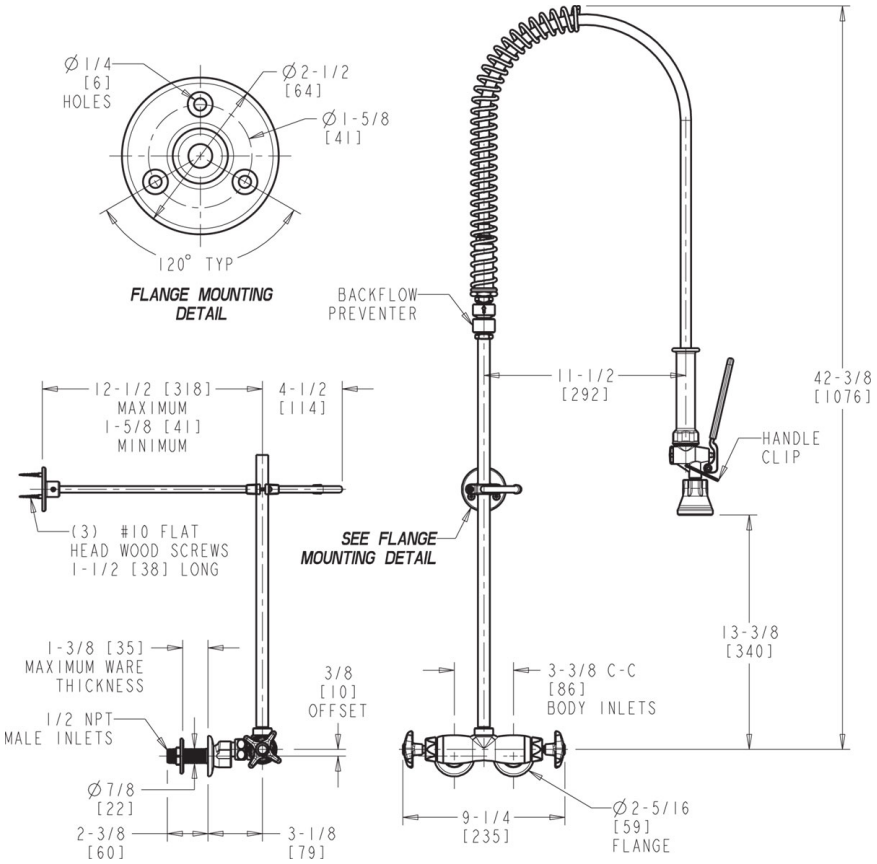

Operation and Maintenance

Installation should be in accordance with local plumbing codes. Flush all pipes thoroughly before installation. After installation, remove spout outlet or flow control and flush faucet thoroughly to clear any debris. Care should be taken when cleaning the product. Do not use abrasive cleaners, chemicals or solvents as they can result in surface damage. Use mild soap and warm water for cleaning and protecting the life of Chicago Faucet products. For specific operation and maintenance refer to the installation instructions and repair parts documents that are located at www.chicagofaucets.com.

Chicago Faucets, member of the Geberit Group, is the leading brand of commercial faucets and fittings in the United States, offering a complete range of products for schools, laboratories, hospitals, office buildings, food service, airports and sport facilities. Call 1.800.TECTRUE or 1.847.803.5000 Option 1 for installation or other technical assistance.

2100 South Clearwater Drive
Des Plaines, IL
P: 847/803-5000
F: 847/803-5454
Technical: 800/TEC-TRUE
www.chicagofaucets.com