Repair Parts

782-VBXKCCP

Concealed Hot and Cold Water Sink Faucet with Pail Hook

Base Parts:

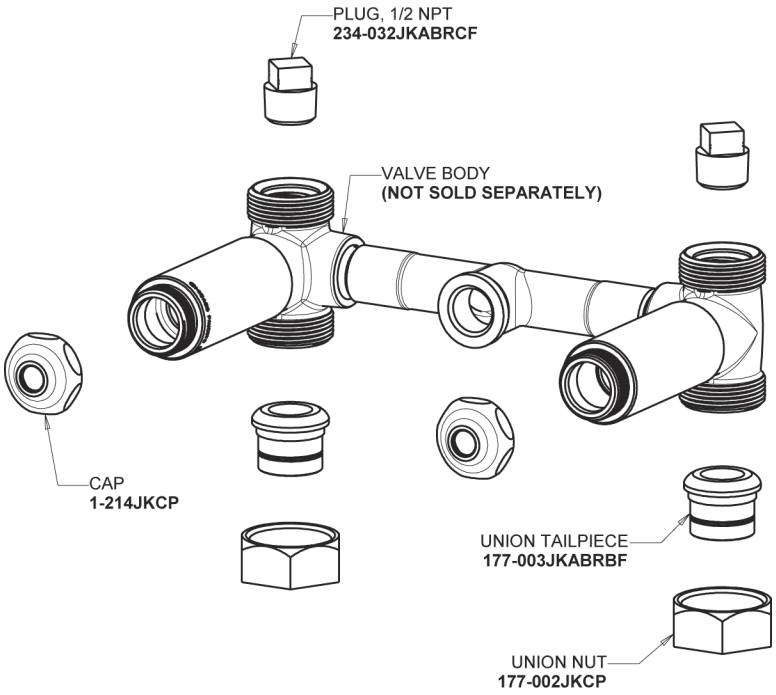

3" Cross Handle (pair)
633-PRJKCP

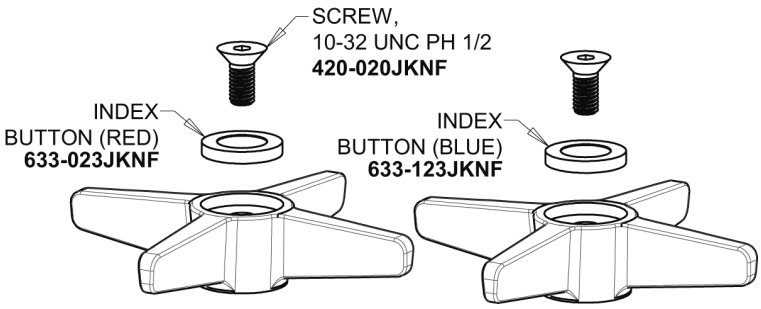

Ceramic 1/4-Turn Cartridge with Check Valve (pair)
1-099XKCJKABNF (right)
1-100XKCJKABNF (left)

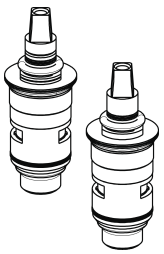

8" Integral Cast Vacuum Breaker Spout
782-VB

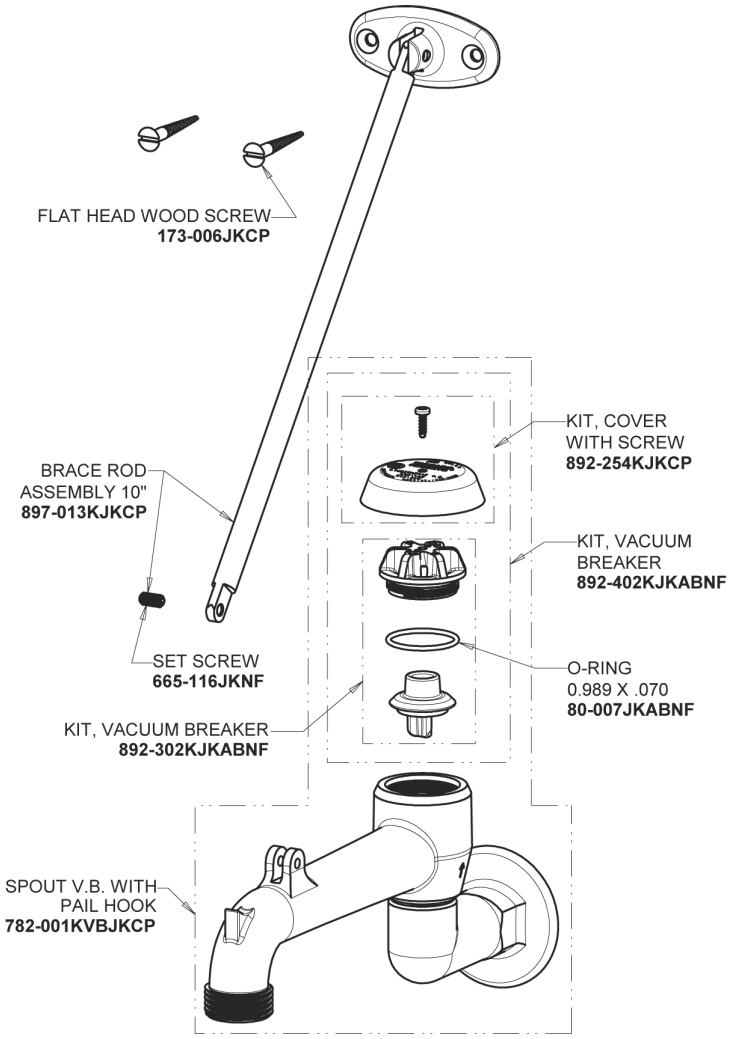

Wall Flange
633-201JKCP

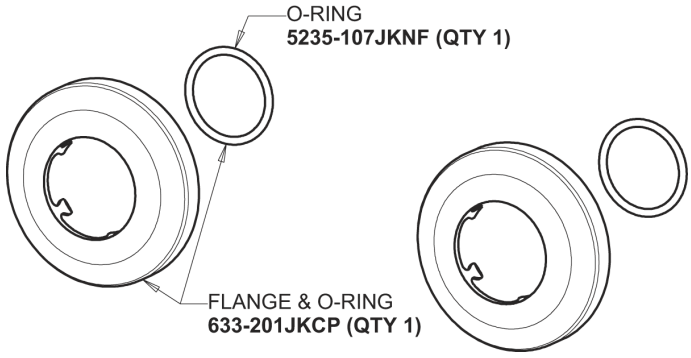

For Technical Assistance:

Phone: 800-TEC-TRUE (832-8783)
Email: techsupport.us@chicagofaucets.com

2100 South Clearwater Drive
Des Plaines, IL 60018
Phone: 847-803-5000
chicagofaucets.com