CHICAGO FAUCETS
a Geberit company

2100 SOUTH CLEARWATER DRIVE
DES PLAINES, ILLINOIS 60018-5999

| FITTING NO. |
| --- |
| 50-TGN8AE3 |
| SUBMITTED MODEL NO. |
| |

| JOB NAME | ITEM NO. |
| --- | --- |

| | |
| --- | --- |
| SUBMITTED AS SHOWN | |
| SUBMITTED AS NOTED | |
| SEE ATTACHED FOR SUBMITTED MODIFICATION | |

ADA COMPLIANT

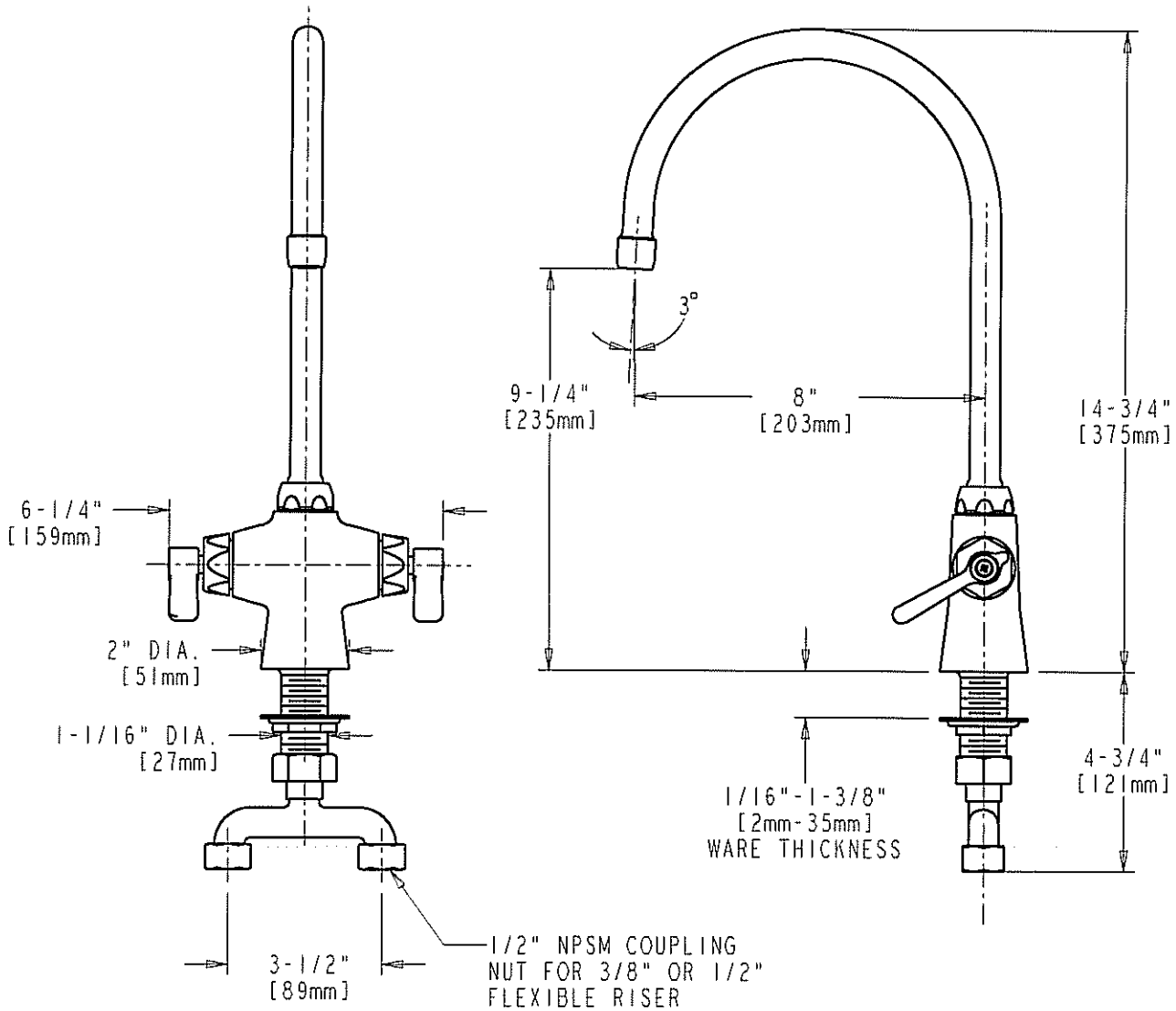


TECHNICAL DATA

- DECK MOUNTED HOT AND COLD WATER FITTING
- GN8A RIGID/SWING GOOSENECK SPOUT
- 369 INDEXED LEVER HANDLES
- QUATURN OPERATING CARTRIDGES
- 3-1/2" [89mm] INLET CONNECTION TEE
- FINISH: CHROME PLATE
- E3 SOFTFLO AERATOR
- 2.2 GPM [8.3 L/min.] FLOW RATE
- ASME A112.18.1M COMPLIANT
- CSA B125 COMPLIANT
- NSF 61 COMPLIANT

DATE: 01-11-06
BY: SID
CHK'D:
APP'D: PT
REV:

50-TGN8AE3

ROUGHING IN DIMENSIONS MAY VARY AND ARE SUBJECT TO CHANGE. NO RESPONSIBILITY IS ASSUMED FOR USE OF SUPERCEDED OR VOIDED DATA.