ROUGHING IN DIMENSIONS MAY VARY AND ARE SUBJECT TO CHANGE. NO RESPONSIBILITY IS ASSUMED FOR USE OF SUPERCEDED OR VOIDED DATA.

CHICAGO FAUCETS®
a Geberit company

2100 South Clearwater Drive
Des Plaines, IL 60018
Phone: 847-803-5000
Fax: 847-803-5454
www.chicagofaucets.com

FOR TECHNICAL ASSISTANCE
1-800-TEC-TRUE (1-800-832-8783)

ROUGH-IN

FITTING NO.	
919-218451AB	
BY: SID	DATE: 02-11-19
CHK: JAR	REV:
SUBMITTED MODEL NO.	

SUBMITTED AS SHOWN		SUBMITTED AS NOTED		SEE ATTACHED FOR SUBMITTED MODIFICATION	

JOB NAME

ITEM NO.

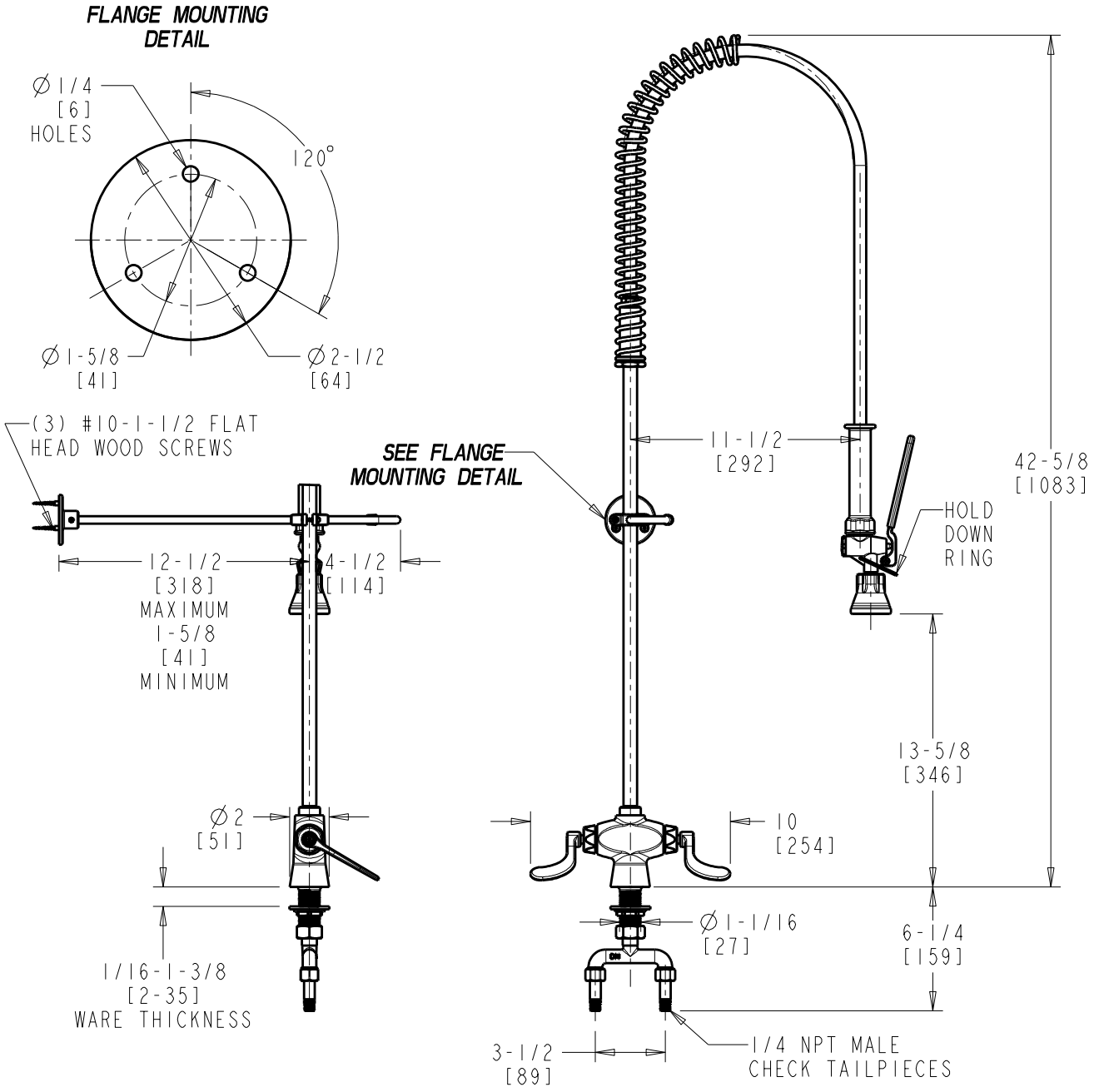

DIMENSIONS ARE IN INCHES AND [MILLIMETERS].

TECHNICAL DATA

- DECK MOUNTED PRE-RINSE SPRAY
- 317 INDEXED WRISTBLADE HANDLES
- CERAMIC DISC OPERATING CARTRIDGES
- 90-LAB WATER CONSERVING PRE-RINSE SPRAY VALVE
- 1.0 GPM [3.8 L/min.] MAXIMUM FLOW RATE
- 44" STAINLESS STEEL HOSE
- 23" RISER
- FINISH: CHROME PLATE
- INTEGRATED PIPE SUPPORT & HOOK ASSEMBLY
- CHECK TAILPIECES
- ASME A112.18.1/CSA B125.1 COMPLIANT
- COMPLIANT TO NSF/ANSI 61, SECTION 9
- MEETS THE LEAD CONTENT REQUIREMENTS OF: CALIFORNIA, VERMONT AND NSF/ANSI 372
- CALGREEN