# Repair Parts

445-PVBRXKCCP

Hot and Cold Water Sink Faucet

**445-PVB**

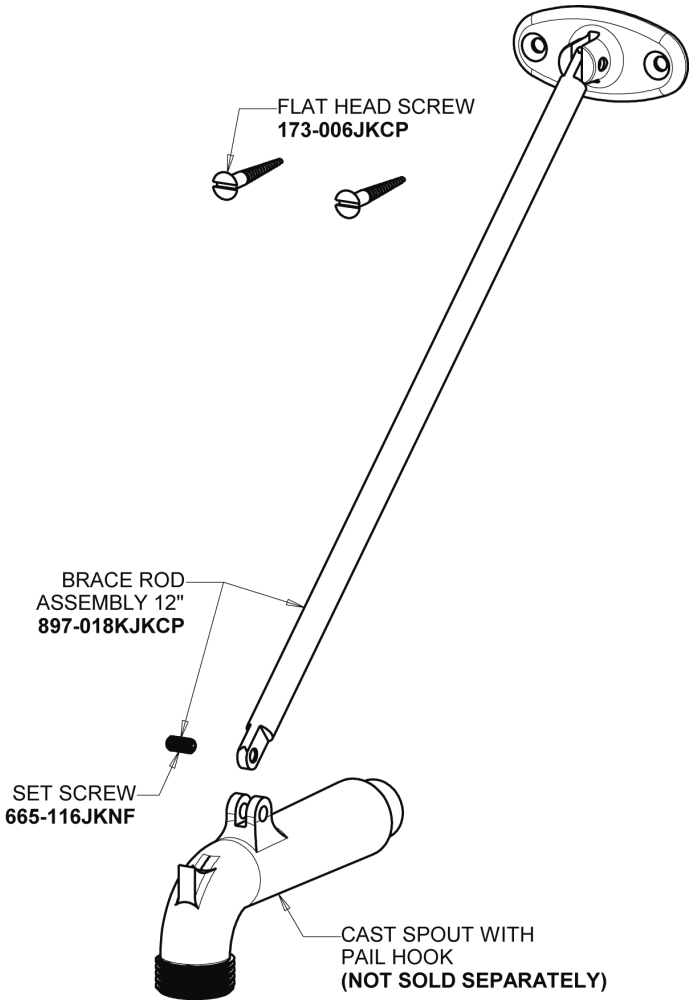


2-1/2" Offset Supply Arm with Integral Shut-off
**RJKABCP**

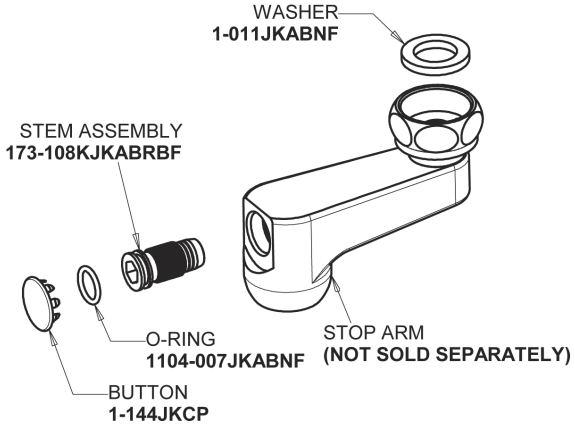


## Base Parts:

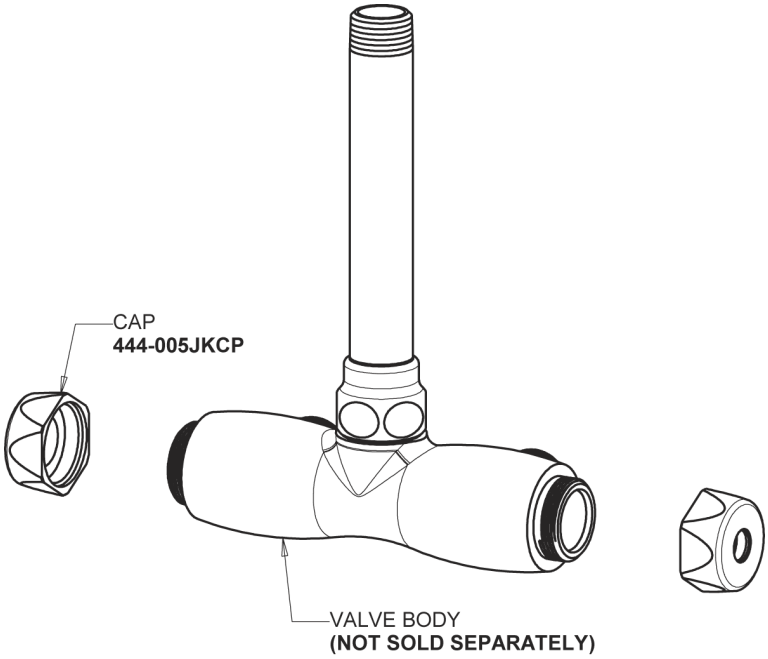


Vacuum Breaker
**892-044KJKRCF**

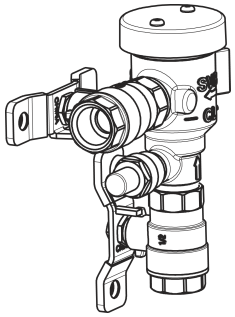

Wall Flange
**1-055JKCP**

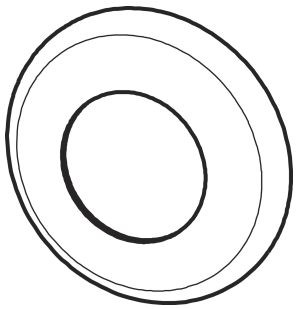

## For Technical Assistance:

Phone: 800-TEC-TRUE (832-8783)

Email: techsupport.us@chicagofaucets.com

2100 South Clearwater Drive
Des Plaines, IL 60018
Phone: 847-803-5000
chicagofaucets.com

# Repair Parts

445-PVBRXKCCP

Hot and Cold Water Sink Faucet

Pipe Support
**902-MJKCP**

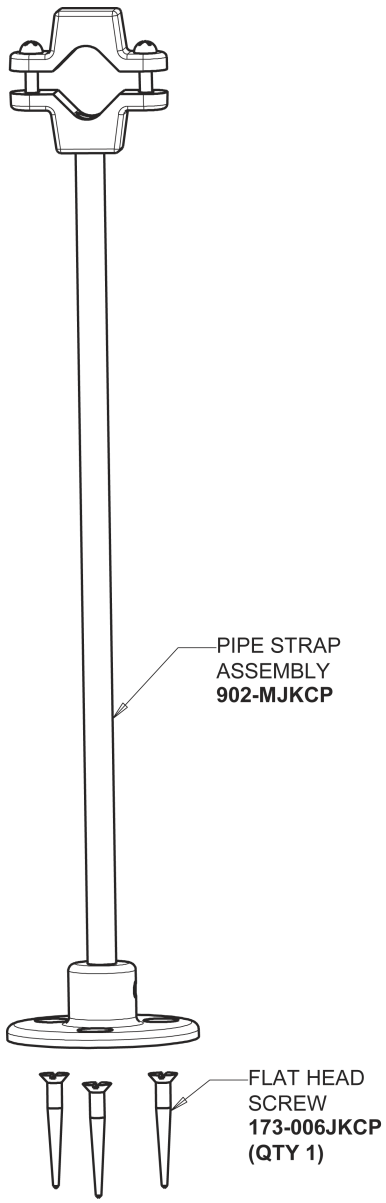


2-3/8" Lever Handle
**369-PRJKCP**

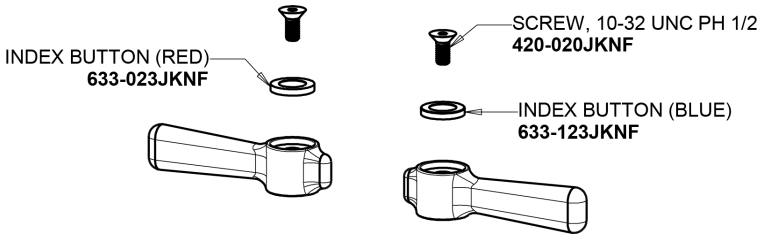


Ceramic 1/4-Turn Cartridge with Check Valve (pair)
**1-099XKCJKABNF (right)**
**1-100XKCJKABNF (left)**

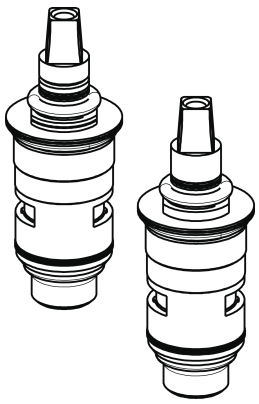

## For Technical Assistance:

Phone: 800-TEC-TRUE (832-8783)
Email: techsupport.us@chicagofaucets.com

2100 South Clearwater Drive
Des Plaines, IL 60018
Phone: 847-803-5000
chicagofaucets.com