CHICAGO FAUCETS®
Last As Long As The Building

2100 SOUTH CLEARWATER DRIVE
DES PLAINES, ILLINOIS 60018-5999

FITTING NO.
350-VPA
SUBMITTED MODEL NO.

JOB NAME	ITEM NO.

SUBMITTED AS SHOWN	
SUBMITTED AS NOTED	
SEE ATTACHED FOR SUBMITTED MODIFICATION	

ADA COMPLIANT

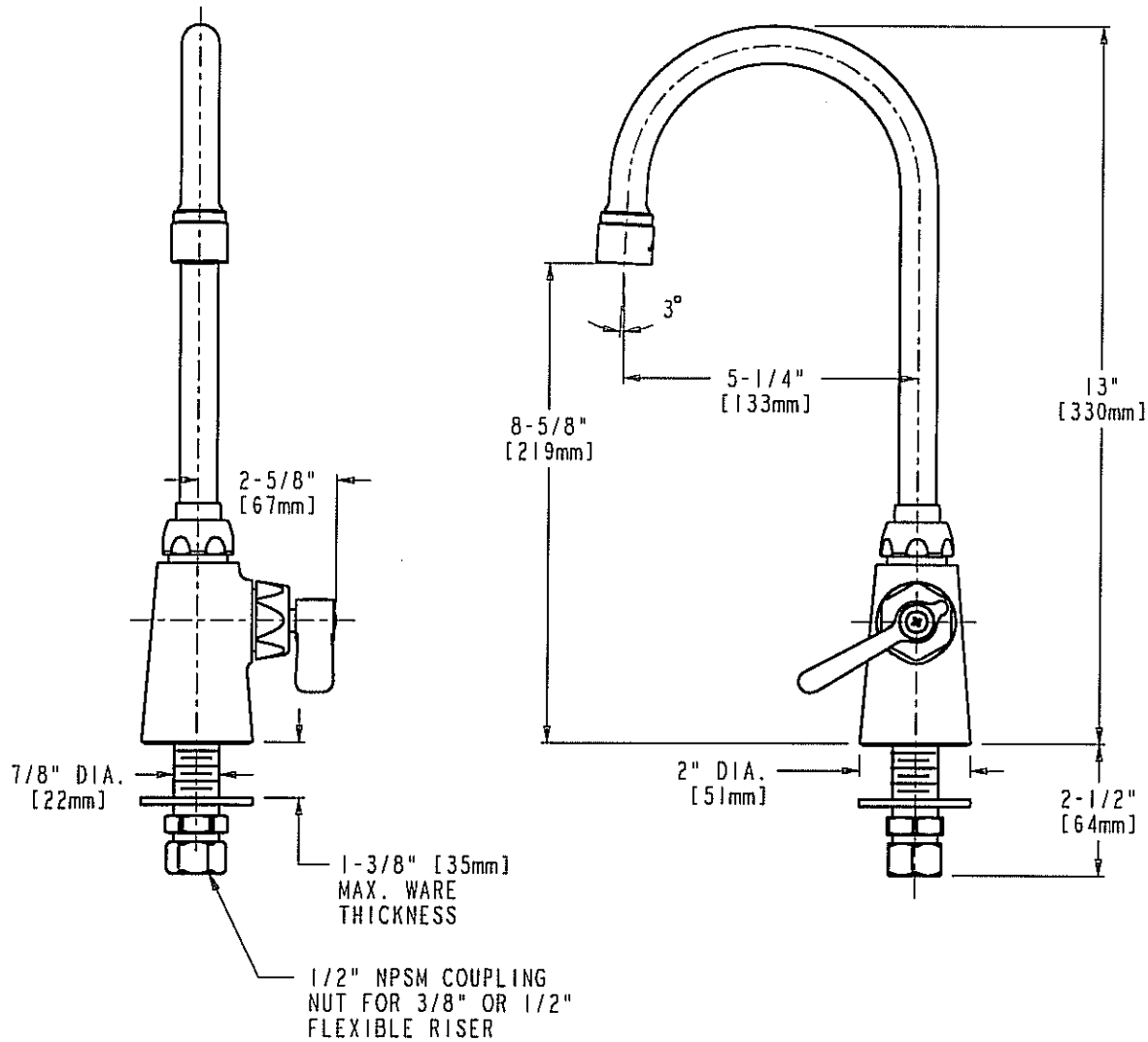

DIMENSIONS IN INCHES AND [MILLIMETERS].

TECHNICAL DATA

- DECK MOUNTED SINGLE SINK FITTING
- GN2A RIGID/SWING GOOSENECK SPOUT
- 369 INDEXED LEVER HANDLE
- QUATURN OPERATING CARTRIDGE
- FINISH: CHROME PLATE
- E3VP VANDAL PROOF SOFTFLO AERATOR
- 2.2 GPM (8.3 L/min.) MAXIMUM FLOW RATE
- ASME A112.18.1M COMPLIANT
- CSA B125 COMPLIANT
- NSF 61 COMPLIANT

DATE: 10-4-02
BY: JAR
CHK'D: SD
APP'D:
REV: A

350-VPA

ROUGHING IN DIMENSIONS MAY VARY AND ARE SUBJECT TO CHANGE. NO RESPONSIBILITY IS ASSUMED FOR USE OF SUPERCEDED OR VOIDED DATA.