Repair Parts

305-LEAXKCRCF

Hot and Cold Water Sink Faucet

Base Parts:

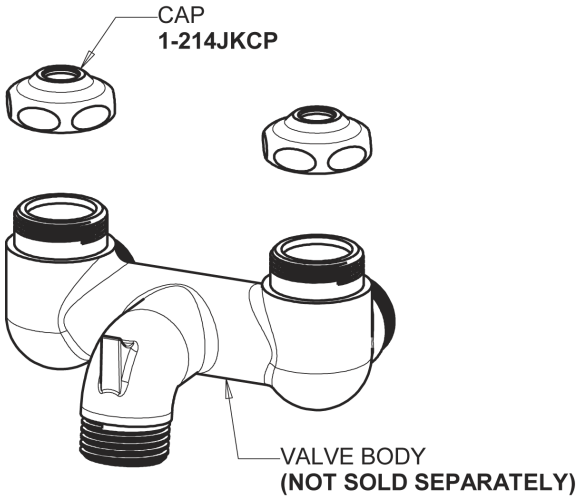

2-3/8" Lever Handle
369-PRJKCP

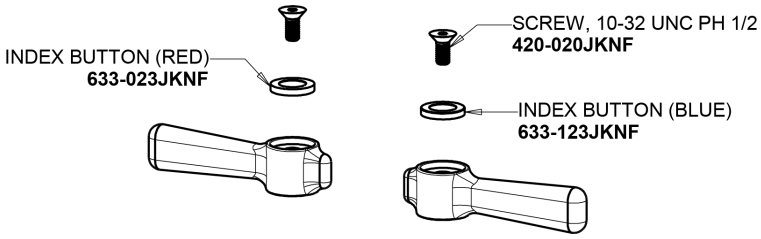

Wall Flange
1-055JKCP

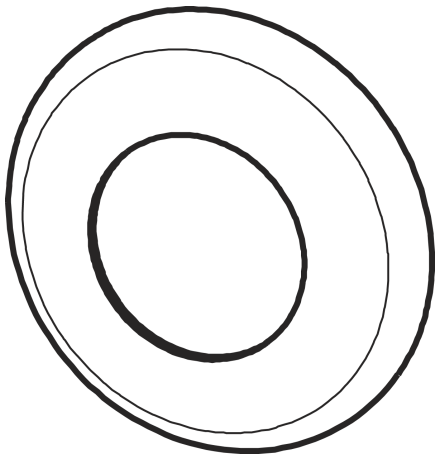

Ceramic 1/4-Turn Cartridge with Check Valve (pair)
1-099XKCJKABNF (right)
1-100XKCJKABNF (left)

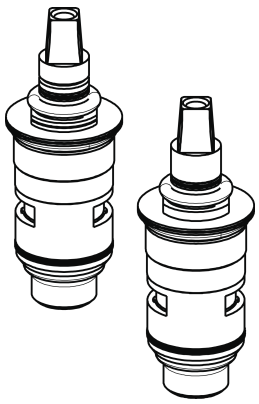

For Technical Assistance:

Phone: 800-TEC-TRUE (832-8783)

Email: techsupport.us@chicagofaucets.com

2100 South Clearwater Drive
Des Plaines, IL 60018
Phone: 847-803-5000
chicagofaucets.com