Repair Parts

923-WSLXKCAB
Pre-Rinse Fitting

CHICAGO FAUCETS
a Geberit company

Base Parts:

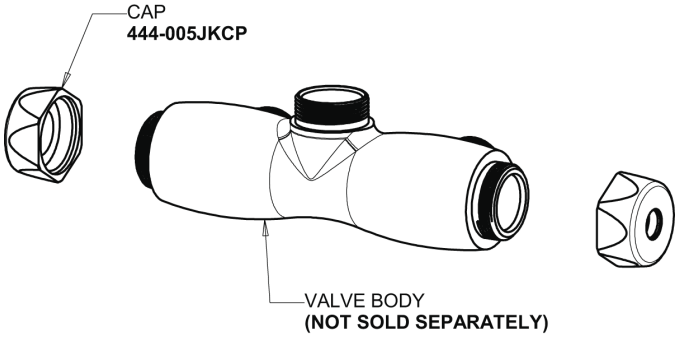

2-3/8" Lever Handle
369-PRJKCP

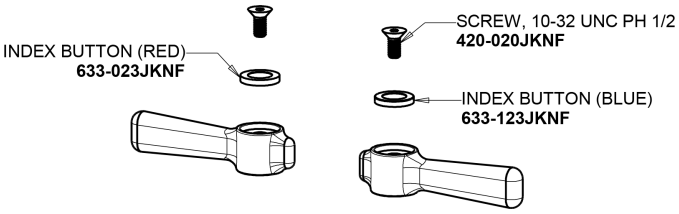

Ceramic 1/4-Turn Cartridge with Check Valve (pair)
1-099XKCJKABNF (right)
1-100XKCJKABNF (left)

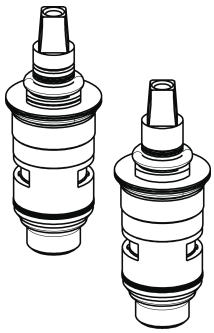

Pre-Rinse Riser
919-SLEAABCP

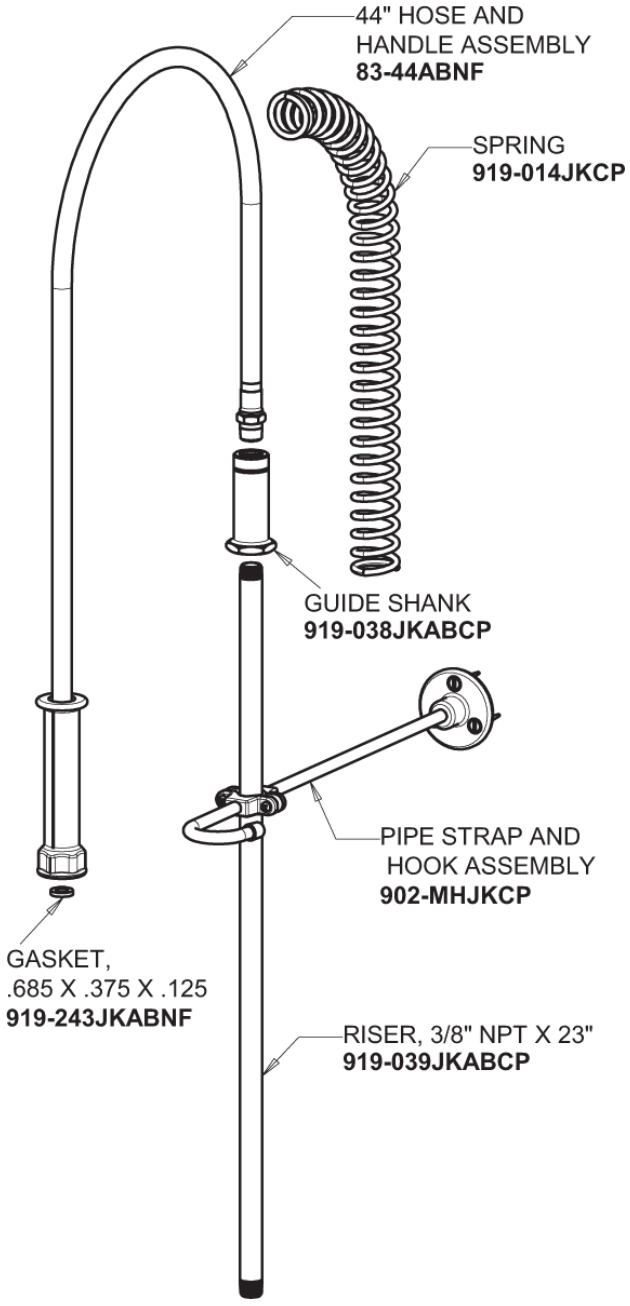

For Technical Assistance:

Phone: 800-TEC-TRUE (832-8783)
Email: techsupport.us@chicagofaucets.com

2100 South Clearwater Drive
Des Plaines, IL 60018
Phone: 847-803-5000
chicagofaucets.com

Repair Parts

923-WSLXKCAB

Pre-Rinse Fitting

CHICAGO FAUCETS
a Geberit company

Pre-Rinse Spray Valve
90-LABCP

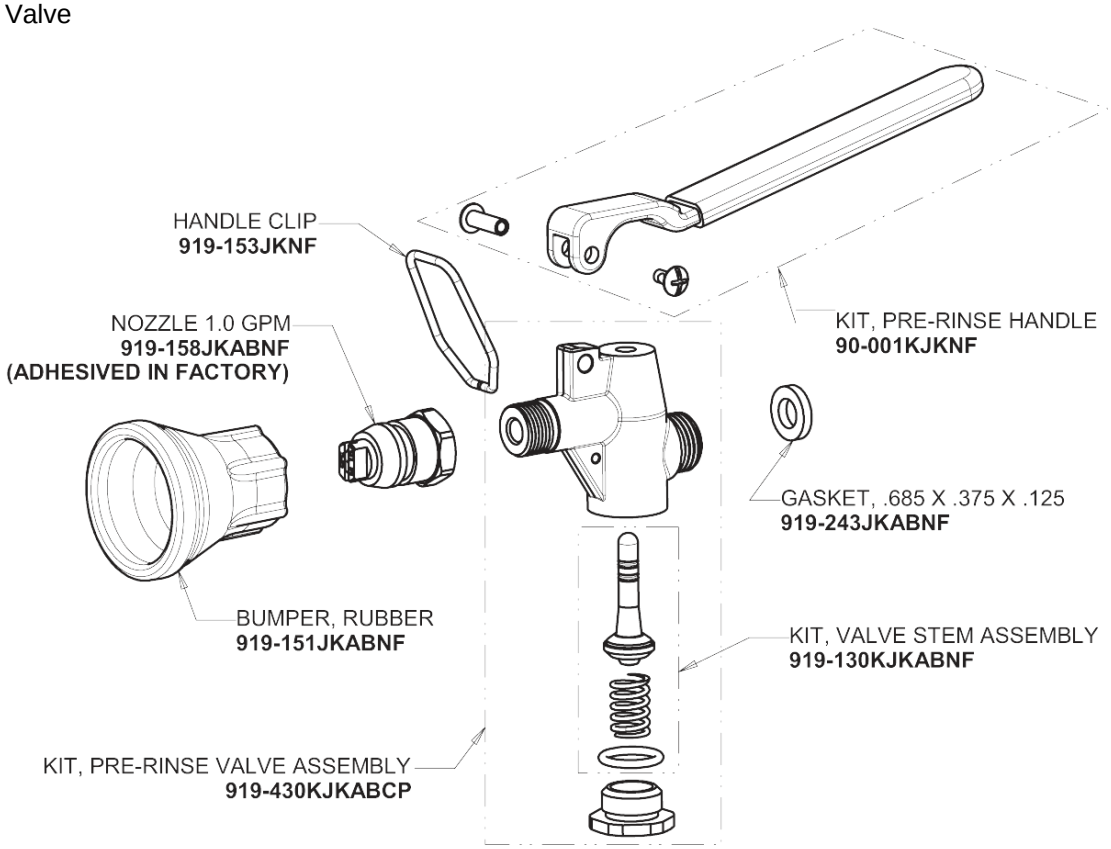

Shank Assembly
932-001KJKABRBF

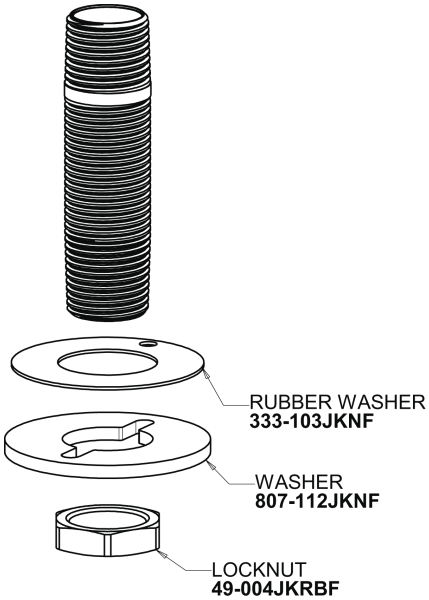

Wall Flange
1-055JKCP

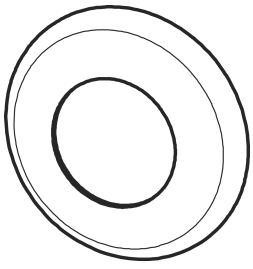

2-1/2" Offset Inlet Supply Arm
HJKABCP

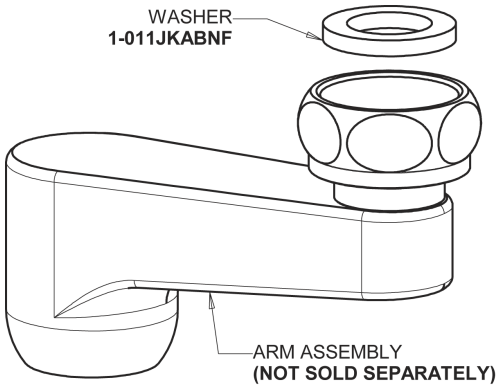

For Technical Assistance:

Phone: 800-TEC-TRUE (832-8783)
Email: techsupport.us@chicagofaucets.com

2100 South Clearwater Drive
Des Plaines, IL 60018
Phone: 847-803-5000
chicagofaucets.com