CHICAGO FAUCETS®
a Geberit company
2100 South Clearwater Drive
Des Plaines, IL 60018
Phone: 847-803-5000
Fax: 847-803-5454
www.chicagofaucets.com

FOR TECHNICAL ASSISTANCE
1-800-TEC-TRUE (1-800-832-8783)

REPAIR PARTS

BY: SID	DATE: 08-22-14
CHK:	REV:

FITTING NO.
786-HGN8AE3-317AB
SUBMITTED MODEL NO.

ITEM NO.

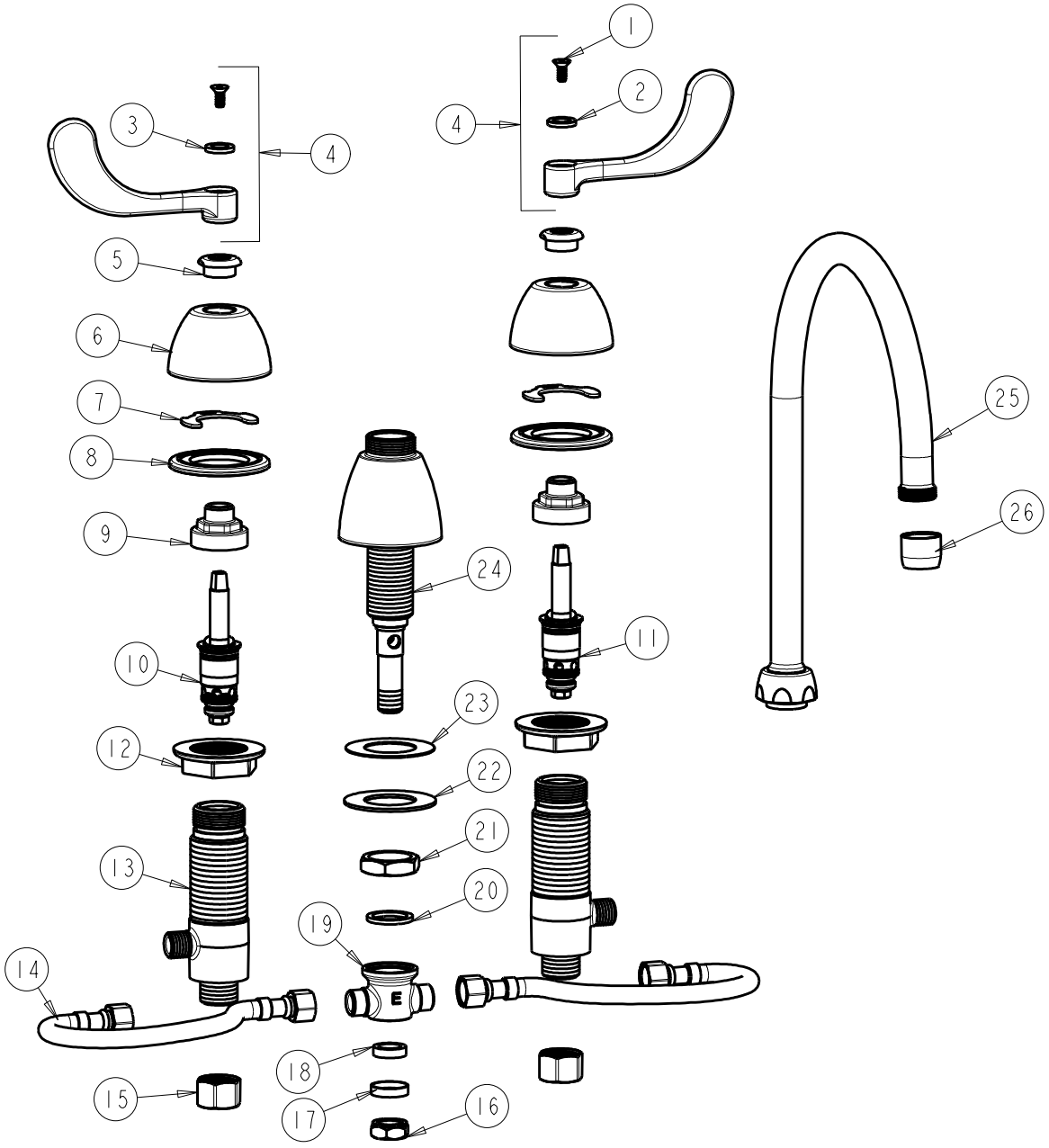

ITEM	PART NO.	DESCRIPTION	ITEM	PART NO.	DESCRIPTION
1	420-020JKNF	SCREW, 1/8 FLAT HEX HEAD X 1/2	14	250-001KJKABNF	HOSE, 3/8 X 3/8
2	633-123JKNF	INDEX BUTTON (BLUE)	15	49-005JKRBF	COUPLING NUT
3	633-023JKNF	INDEX BUTTON (RED)	16	689-013JKRBF	LOCKNUT FOR LAVATORY FITTINGS
4	317-PRJKCP	HANDLE, 4" WRISTBLADE (PAIR)	17	250-087JKRBF	RETAINER
5	422-113JKCP	ESCUTCHEON NUT	18	1797-029JKABNF	RUBBER WASHER
6	250-082JKCP	ESCUTCHEON	19	785-123JKABRBF	TEE CONNECTION
7	200-009JKNF	CLIP, RETAIN	20	250-200JKABNF	GASKET
8	888-026JKNF	WASHER, SEALING	21	250-054JKRBF	LOCKNUT
9	274-014JKRBF	NUT, CAP	22	50-014JKNF	STEEL WASHER
10	377-XTLHJKABNF	LH QUATURN CARTRIDGE	23	739-056JKNF	RUBBER WASHER
11	377-XTRHJKABNF	RH QUATURN CARTRIDGE	24	785-202KJKABCP	SPOUT BASE ASSEMBLY
12	250-004JKNF	LOCKNUT	25	GN8AJKABCP	SPOUT, GN 8" C-C
13	250-075JKABRBF	BODY, VALVE	26	E3JKABCP	OUTLET, AERATOR 2.2 GPM