Repair Parts

EQ-A11A-62ABCP

EQ Curved Series Lavatory Sink Faucet with Hands-free Infrared Detection

CHICAGO FAUCETS
a Geberit company

EQ-62KJKABNF EQ Control Box, Long Life Battery, Mechanical Mixer

Base Parts:

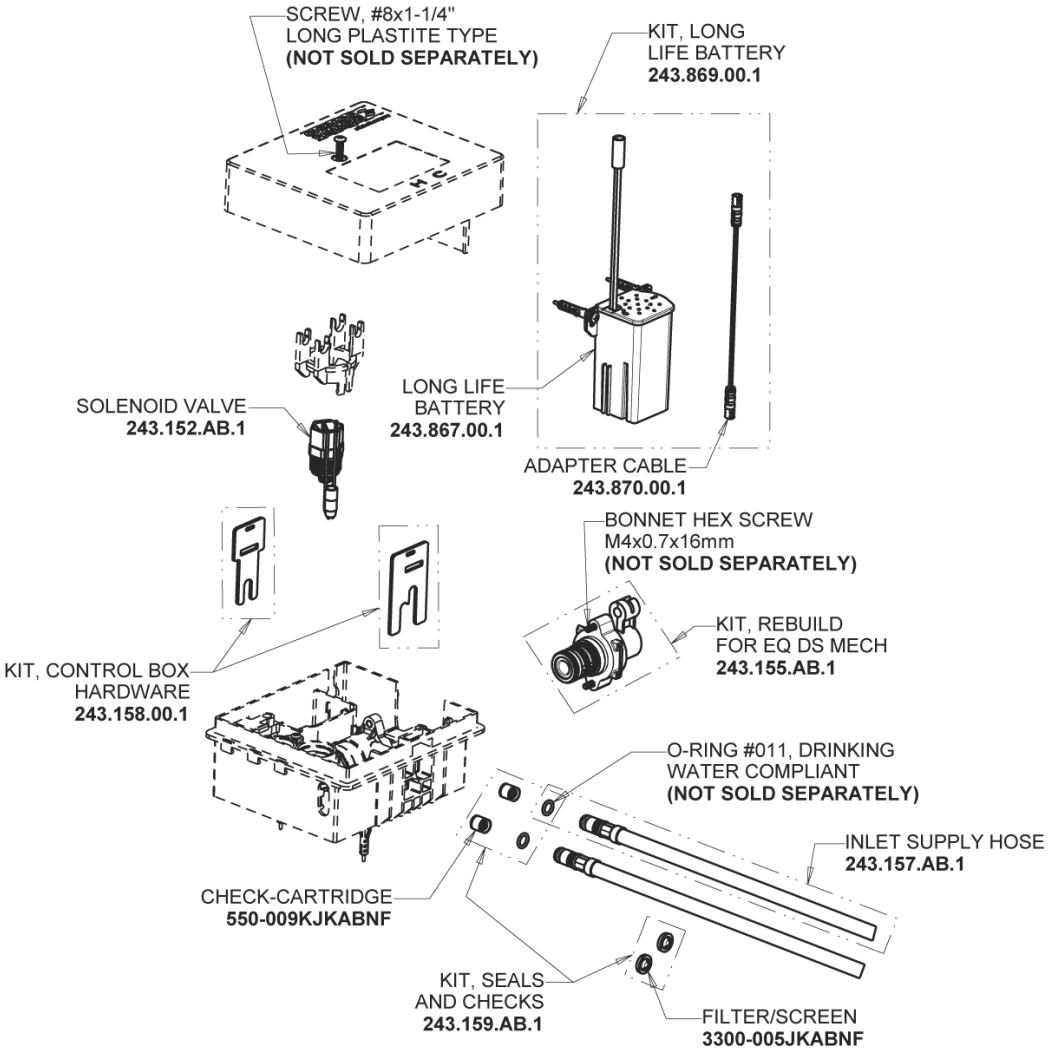

Polished Chrome EQ Curved Spout, 0.5 GPM

EQ-A11A-KJKABCP

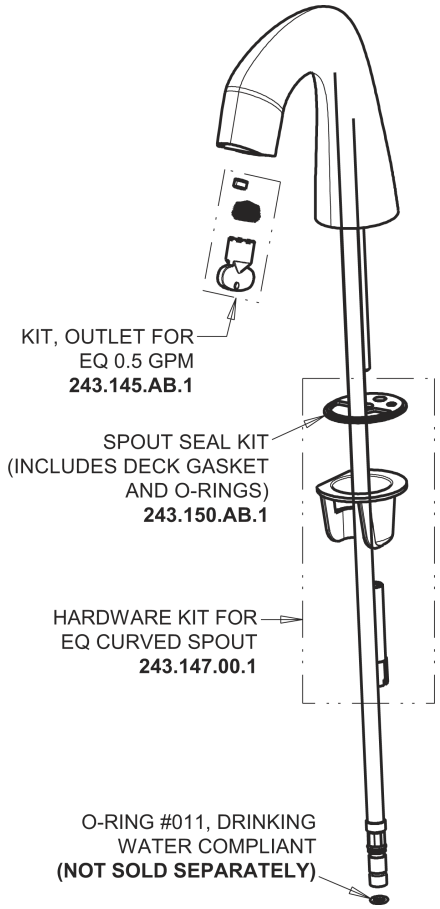

For Technical Assistance:

Phone: 800-TEC-TRUE (832-8783)

Email: techsupport.us@chicagofaucets.com

2100 South Clearwater Drive
Des Plaines, IL 60018
Phone: 847-803-5000
chicagofaucets.com