CHICAGO FAUCETS
a Geberit company

# LWV2-C53-50

**Angle Pattern Water Valve**

- 1/4-Turn Adjustable Flow Compression Cartridge
- Plastic Handle with Cold Water Button
- 30 Degree Angle Serrated Nozzle with Vacuum Breaker
- Straight Wall Flange
- Solid Brass Valve Construction
- Fully Assembled and Tested

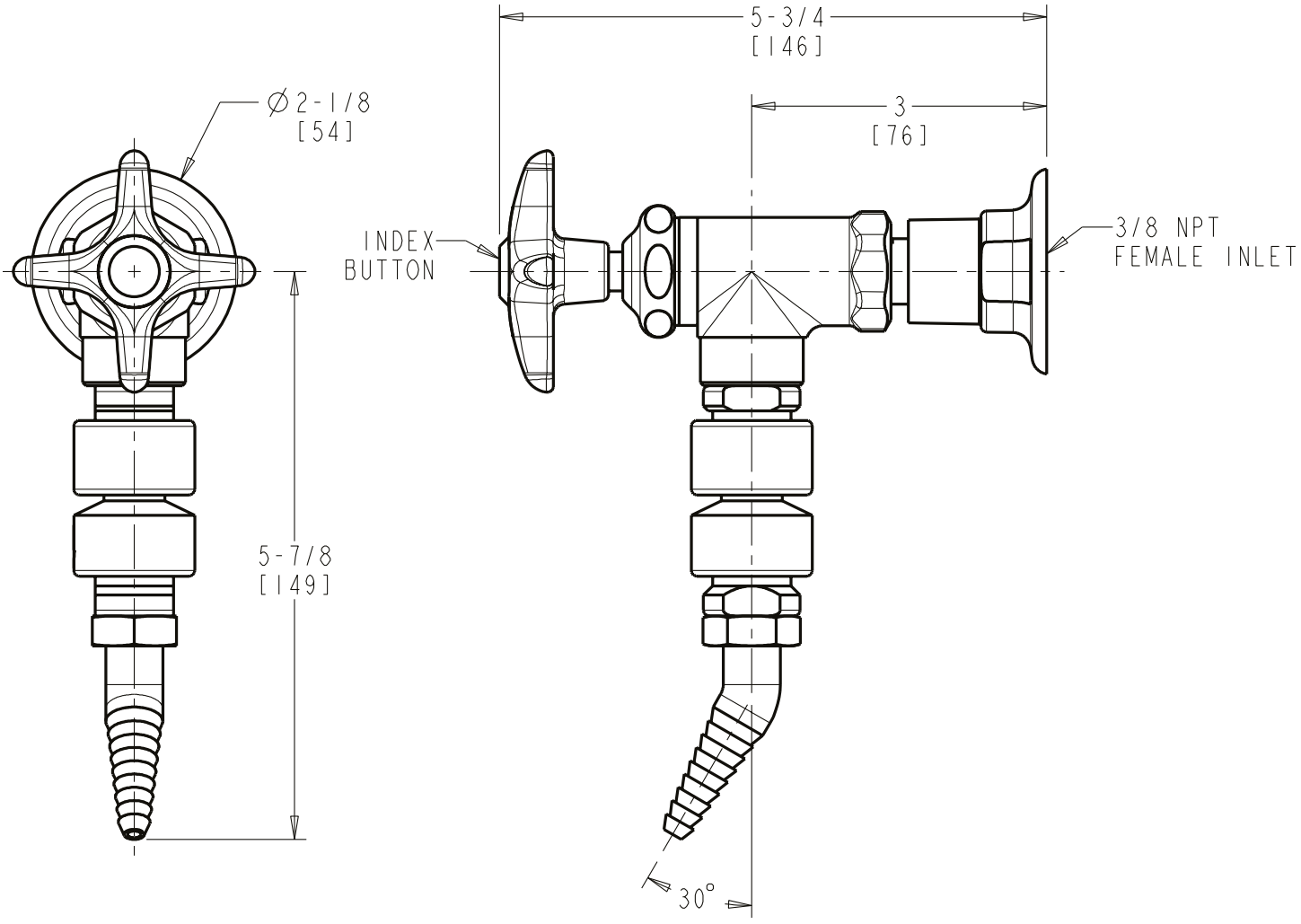


Note: All dimensions are in inches and [millimeters].

**For Technical Assistance:**

Phone: 800-TEC-TRUE (832-8783)

Email: techsupport.us@chicagofaucets.com

The Chicago Faucet Company
2100 South Clearwater Drive
Des Plaines, IL 60018
Phone: 847/803-5000
Fax: 847/803-5454
Technical: 800/832-8783
www.chicagofaucets.com

©2016 The Chicago Faucet Company. All rights reserved.
Product specifications subject to change without notice.