ROUGHING IN DIMENSIONS MAY VARY AND ARE SUBJECT TO CHANGE. NO RESPONSIBILITY IS ASSUMED FOR USE OF SUPERCEDED OR VOIDED DATA.

CHICAGO FAUCETS®
a Geberit company

2100 South Clearwater Drive
Des Plaines, IL 60018
Phone: 847-803-5000
Fax: 847-803-5454
www.chicagofaucets.com

FOR TECHNICAL ASSISTANCE
1-800-TEC-TRUE (1-800-832-8783)

ROUGH-IN

BY: SID	DATE: 05-13-10
CHK:	REV:

FITTING NO.
786-TWABCP

SUBMITTED MODEL NO.

SUBMITTED AS SHOWN		SUBMITTED AS NOTED		SEE ATTACHED FOR SUBMITTED MODIFICATION	

JOB NAME

ITEM NO.

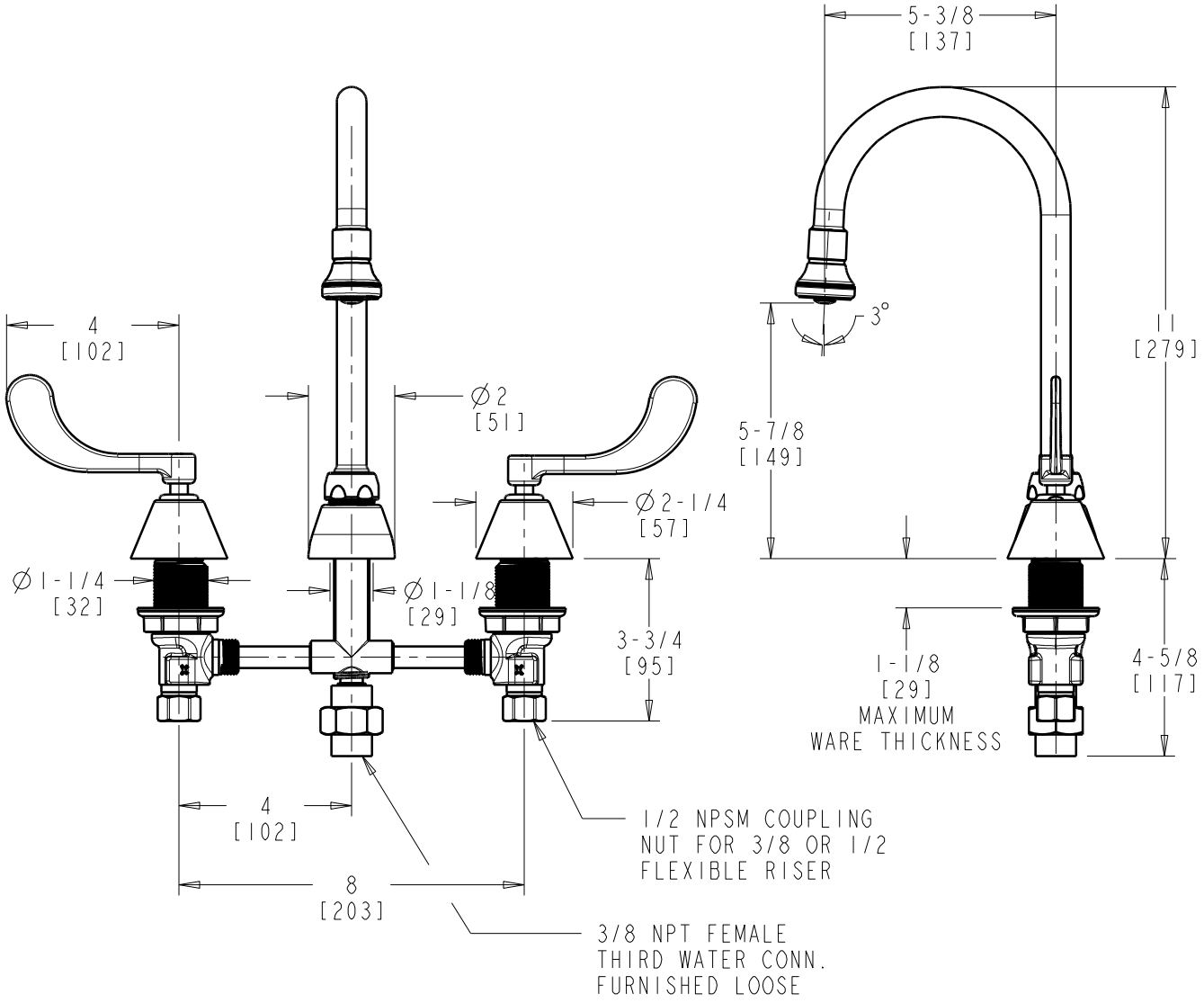

DIMENSIONS ARE IN INCHES AND [MILLIMETERS].

TECHNICAL DATA

- DECK MOUNTED FITTING
- GN2B RIGID/SWING GOOSENECK SPOUT
- 317 INDEXED WRISTBLADE HANDLES
- QUATURN OPERATING CARTRIDGES
- 3RD WATER INLET CONNECTION
- FINISH: CHROME PLATE
- E4 MALE ROSE SPRAY OUTLET
- 2.0 GPM [7.6 L/min.] MAXIMUM FLOW RATE
- ASME A112.18.1/CSA B125.1 COMPLIANT
- NSF/ANSI 61 COMPLIANT
- ADA ANSI/ICC A117.1 COMPLIANT

ADA COMPLIANT