CHICAGO FAUCETS®
Last As Long As The Building

2100 SOUTH CLEARWATER DRIVE
DES PLAINES, ILLINOIS 60018-5999

FITTING NO.
305-VBLESSARM
SUBMITTED MODEL NO.

JOB NAME

ITEM NO.

SUBMITTED AS SHOWN	
SUBMITTED AS NOTED	
SEE ATTACHED FOR SUBMITTED MODIFICATION	

ADA COMPLIANT

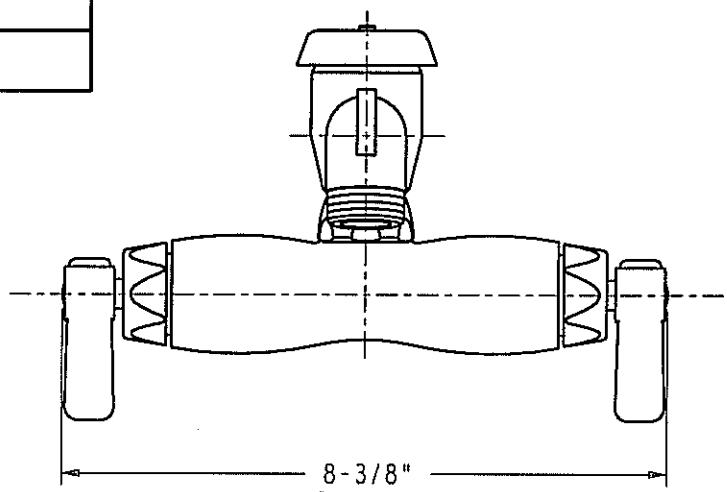

FRONT VIEW

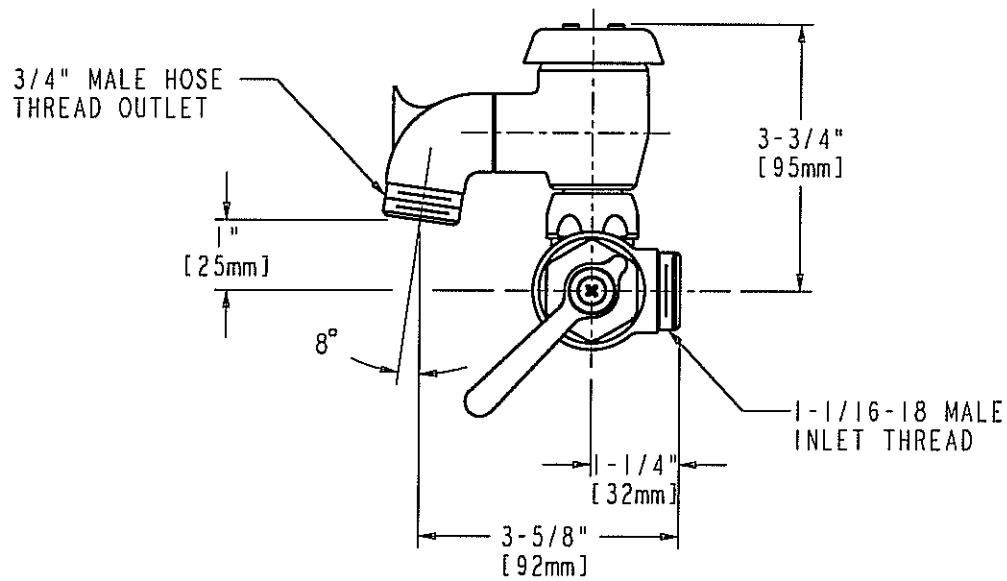

SIDE VIEW

DIMENSIONS IN INCHES AND [MILLIMETERS].

TECHNICAL DATA

- WALL MOUNTED SERVICE SINK FAUCET
- VACUUM BREAKER SPOUT WITH PAIL HOOK
- 369 INDEXED LEVER HANDLES
- QUATURN OPERATING CARTRIDGES
- FINISH: CHROME PLATE OR ROUGH CHROME
- LESS ARMS
- 3/4" MALE HOSE THREAD OUTLET
- ASME A112.18.1M COMPLIANT
- CSA B125 COMPLIANT

DATE: 10-16-02
BY: JAR
CHK'D: SD
APP'D:
REV: A

305-VBLESSARM

ROUGHING IN DIMENSIONS MAY VARY AND ARE SUBJECT TO CHANGE. NO RESPONSIBILITY IS ASSUMED FOR USE OF SUPERCEDED OR VOIDED DATA.