Repair Parts

405-V401XKAB

Base Parts:

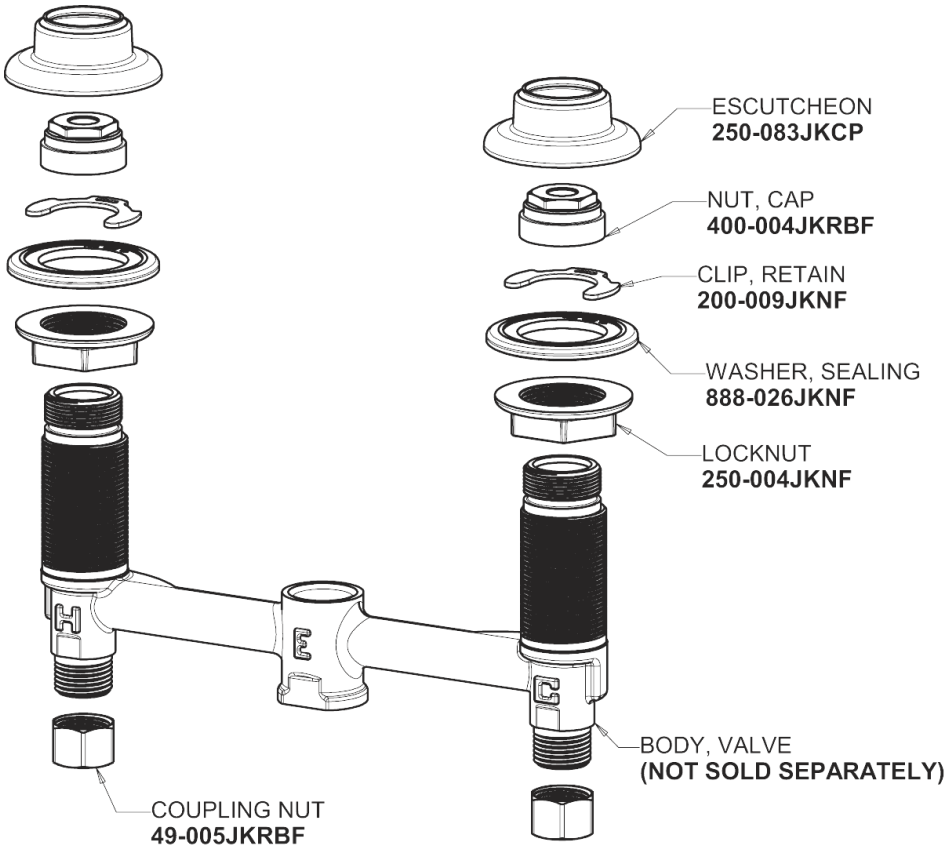

405 Series Spout
401-602KJKCP

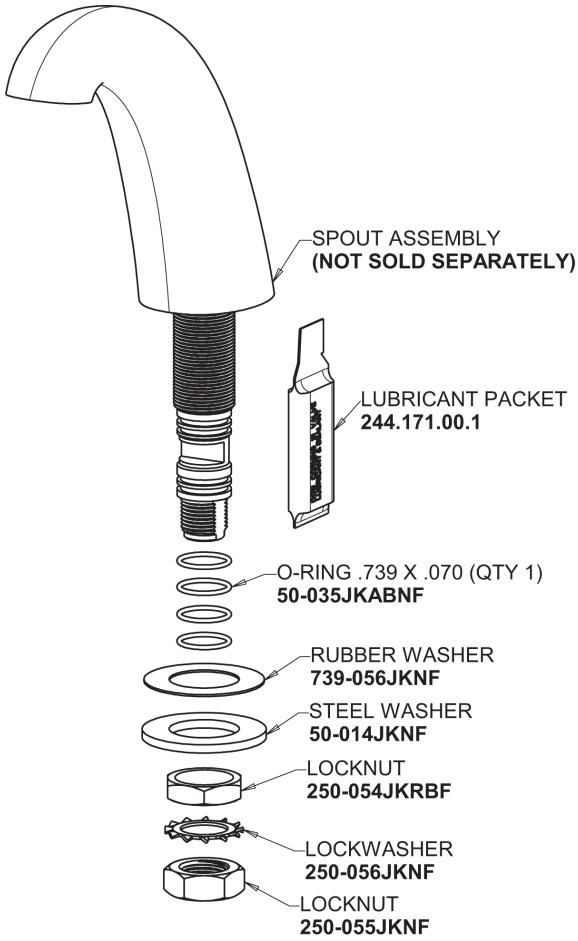

For Technical Assistance:

Phone: 800-TEC-TRUE (832-8783)
Email: techsupport.us@chicagofaucets.com

2100 South Clearwater Drive
Des Plaines, IL 60018
Phone: 847-803-5000
chicagofaucets.com

Repair Parts

405-V401XKAB

CHICAGO FAUCETS
a Geberit company

3-7/8" Canopy Single-Wing Handle
401-PRJKCP

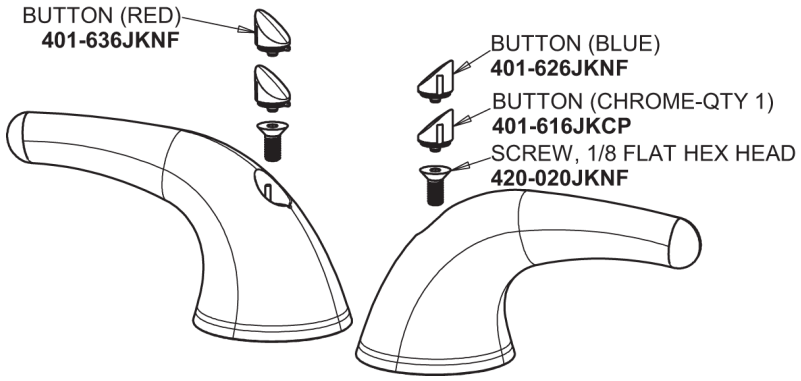

2.2 GPM (8.3 L/min) Vandal Proof Softflo Aerator
E12VPJKABCP

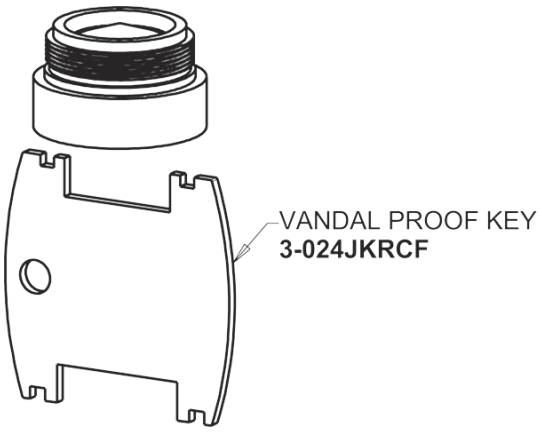

Ceramic 1/4-Turn Cartridge (pair)
1-099XKJKABNF (right)
1-100XKJKABNF (left)

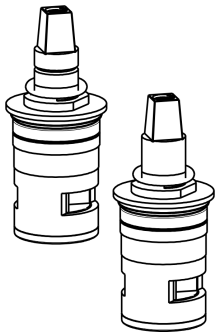

For Technical Assistance:

Phone: 800-TEC-TRUE (832-8783)
Email: techsupport.us@chicagofaucets.com

2100 South Clearwater Drive
Des Plaines, IL 60018
Phone: 847-803-5000
chicagofaucets.com