# Repair Parts

923-G204WSXKCAB

Pre-Rinse Fitting

CHICAGO FAUCETS
a Geberit company

Base for 923 Series fittings

## Base Parts:

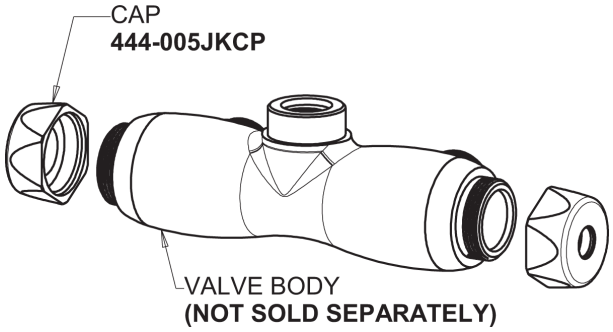


4-Arm Handle
**204-PRJKCP**

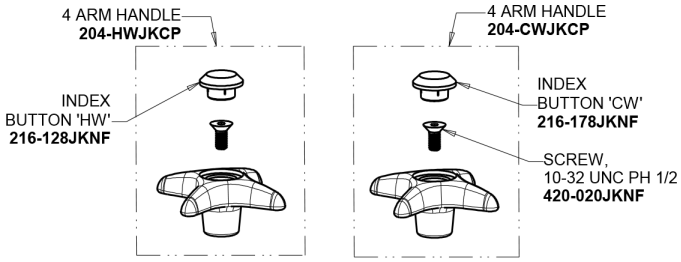


Ceramic 1/4-Turn Cartridge with Check Valve (pair)
**1-099XKCJKABNF (right)**
**1-100XKCJKABNF (left)**

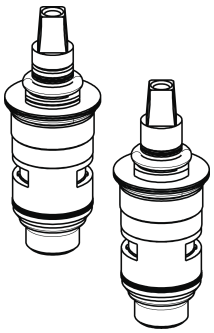

Pre-Rinse Riser
**919-SLEAABCP**

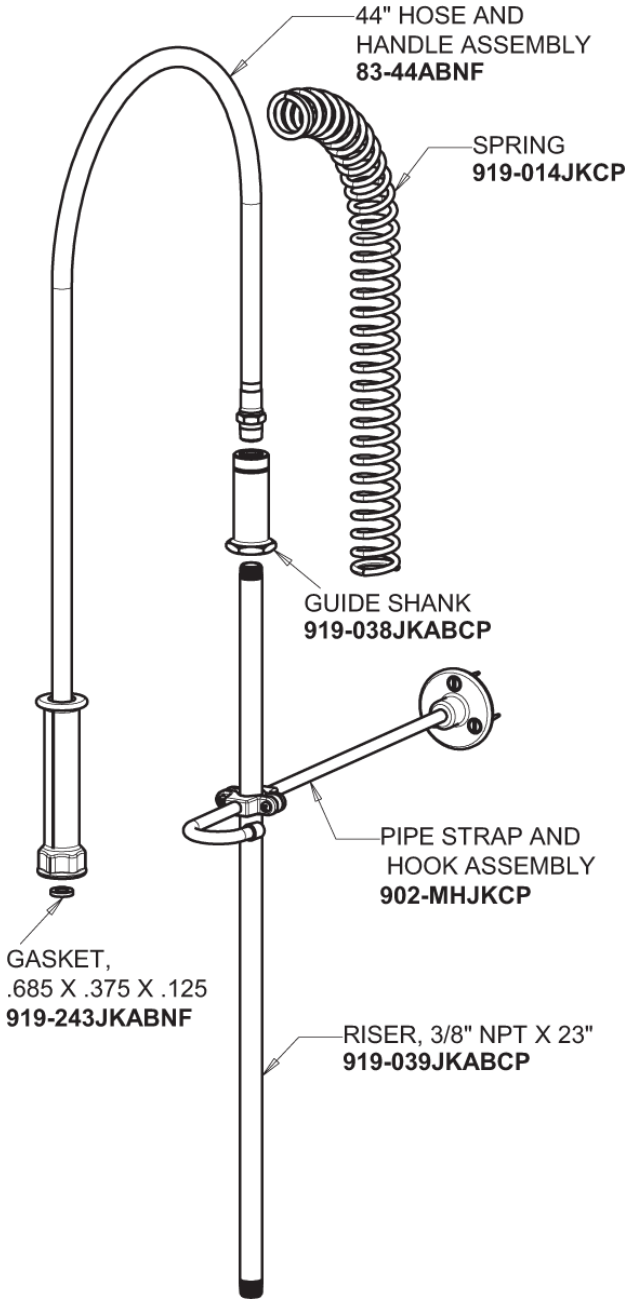


## For Technical Assistance:

Phone: 800-TEC-TRUE (832-8783)
Email: techsupport.us@chicagofaucets.com

2100 South Clearwater Drive
Des Plaines, IL 60018
Phone: 847-803-5000
chicagofaucets.com

# Repair Parts

923-G204WSXKCAB

Pre-Rinse Fitting

CHICAGO FAUCETS
a Geberit company

Pre-Rinse Spray Valve
**90-LABCP**

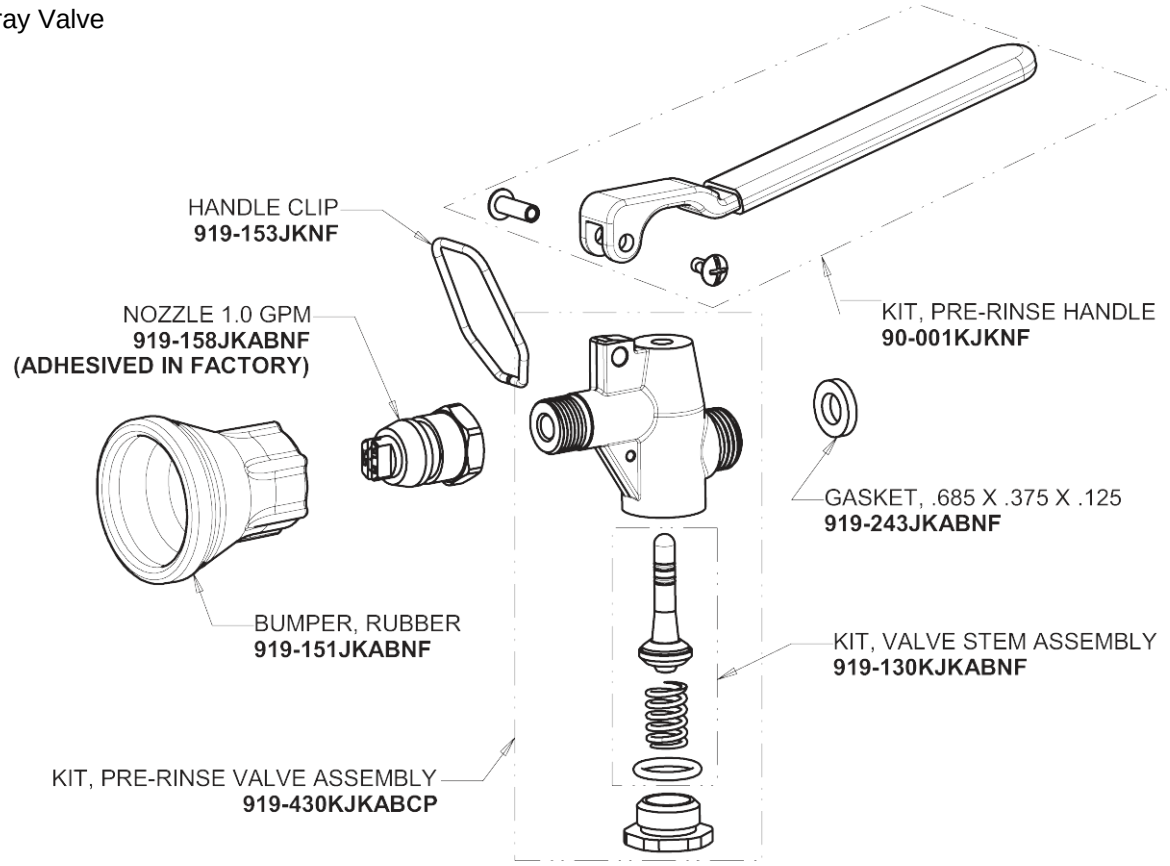


Shank Assembly
**932-001KJKABRBF**

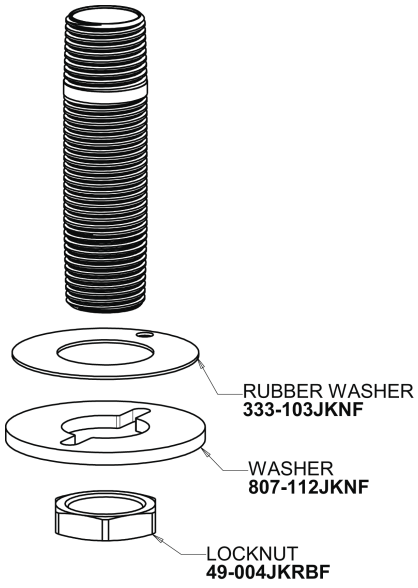


Wall Flange
**1-055JKCP**

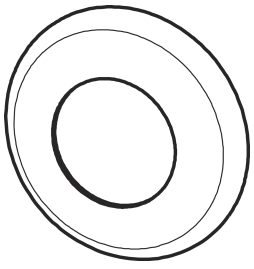

3/8" Offset Inlet Supply Arm
**GJKABCP**

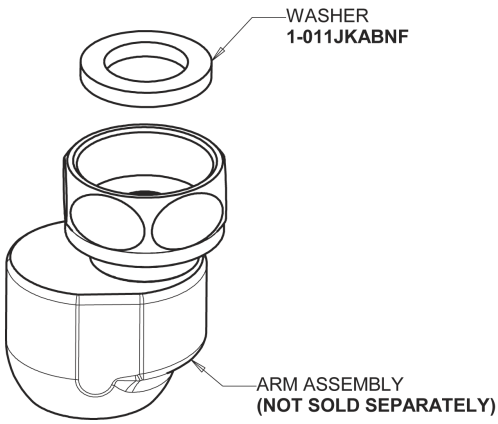


## For Technical Assistance:

Phone: 800-TEC-TRUE (832-8783)
Email: techsupport.us@chicagofaucets.com

2100 South Clearwater Drive
Des Plaines, IL 60018
Phone: 847-803-5000
chicagofaucets.com