Safety Fittings
8410-NF

Product Type

Safety eye/face wash, drench shower fitting

Features & Specifications

Performance Specification

Warranty

- 1-Year Limited Finish Warranty
- 1-Year Limited Material Warranty

Codes & Standards

- WARNING: This product can expose you to lead, which is known to the State of California to cause cancer and birth defects or other reproductive harm. For more information go to www.P65Warnings.ca.gov.

Job Name _____

Item Number _____

Section/Tag _____

Model Specified _____

Architect _____

Engineer _____

Contractor _____

[ ] Submitted as Shown [ ] Submitted with Variations

Date _____

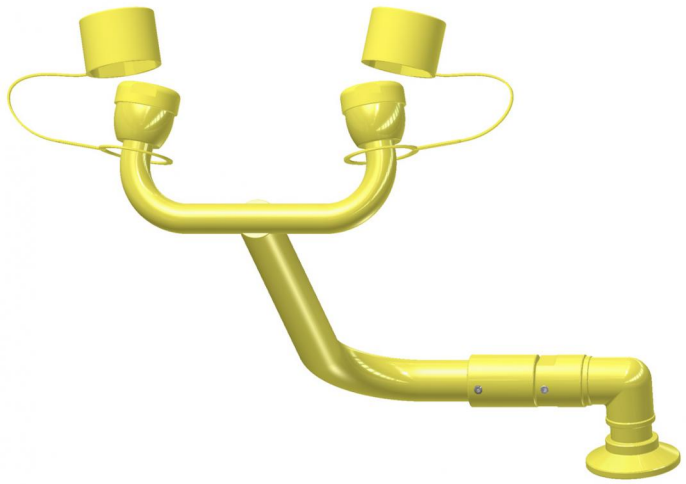

2100 South Clearwater Drive
Des Plaines, IL
P: 847/803-5000
F: 847/803-5454
Technical: 800/TEC-TRUE
www.chicagofaucets.com

8410-NF

Architect/Engineer Specification

Chicago Faucets No. 8410-NF, Eye/Face Wash, 1/2" NPT Male Thread Inlet, Anti-corrosive polyamide 11 plastic coating in high-visibility yellow color, Eyewash assembly in ABS plastic, Two high-flow aerated water spray at low pressure with automatic opening anti-dust cover, Deck Mounted Vertical Swing Down Operation, Brass fittings Construction, High-visibility photoluminescence safety sign with green background and white text for easy identification, Maintenance card for recording periodic testing and Certified to the ANSI Z358.1 Standard for Emergency Eyewash and Shower Equipment.

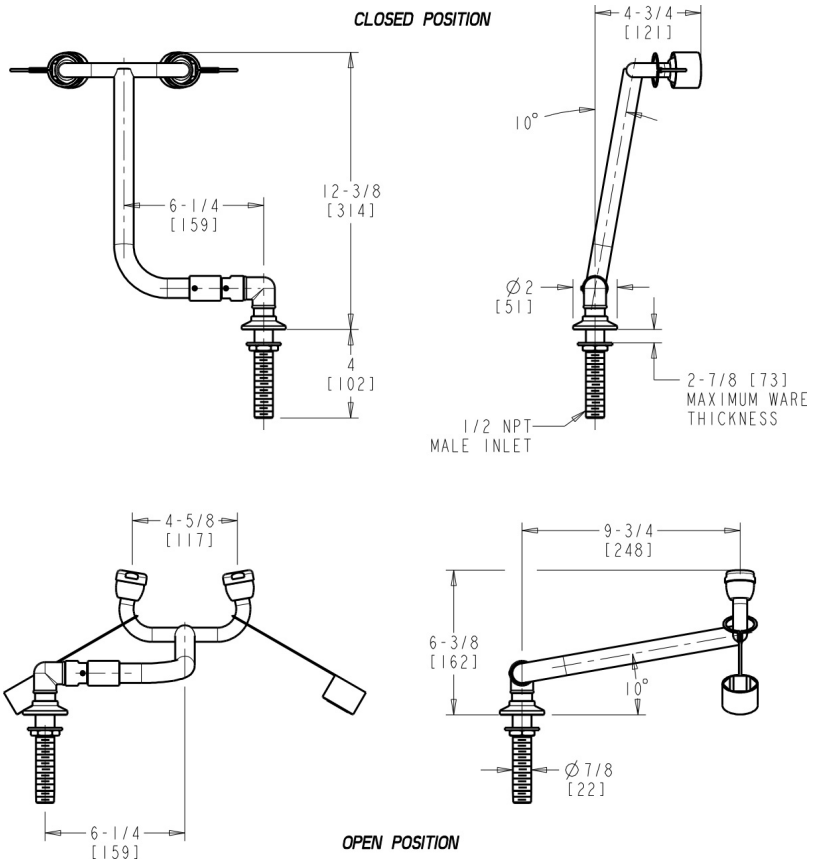

Operation and Maintenance

Installation should be in accordance with local plumbing codes. Flush all pipes thoroughly before installation. After installation, remove spout outlet or flow control and flush faucet thoroughly to clear any debris. Care should be taken when cleaning the product. Do not use abrasive cleaners, chemicals or solvents as they can result in surface damage. Use mild soap and warm water for cleaning and protecting the life of Chicago Faucet products. For specific operation and maintenance refer to the installation instructions and repair parts documents that are located at www.chicagofaucets.com.

Chicago Faucets, member of the Geberit Group, is the leading brand of commercial faucets and fittings in the United States, offering a complete range of products for schools, laboratories, hospitals, office buildings, food service, airports and sport facilities. Call 1.800.TECTRUE or 1.847.803.5000 Option 1 for installation or other technical assistance.

2100 South Clearwater Drive
Des Plaines, IL
P: 847/803-5000
F: 847/803-5454
Technical: 800/TEC-TRUE
www.chicagofaucets.com