MECHANICAL FAUCETS

332-L12ABCP

Glass and Pot Fillers

Product Type

Wall Mounted Single Hole Single Supply Sink Faucet

Features & Specifications

- Single Hole
- 12" L Type Swing Spout
- 2.2 GPM (8.3 L/min) Aerator
- 2-3/8" Vandal Proof Lever Handles
- Quaturn Compression Operating Cartridges
- 1/2" NPT Female Thread Inlet with Integral Wall Flange
- ECAST® design provides durable construction with total lead content equal to or less than 0.25% by weighted average

Performance Specification

- Rated Operating Pressure: 20-125 PSI
- Rated Operating Temperature: 40-140ºF

Warranty

- Lifetime Limited Faucet Warranty
- 5-Year Limited Cartridge Warranty
- 1-Year Limited Finish Warranty

Codes & Standards

- ASME A112.18.1/CSA B125.1
- Certified to NSF/ANSI 61, Section 9 by CSA
- ADA ANSI/ICC A117.1

NOTE: This fitting is not intended to be sold in California after January 1, 2016

Job Name _____

Item Number _____

Section/Tag _____

Model Specified _____

Architect _____

Engineer _____

Contractor _____

[ ] Submitted as Shown [ ] Submitted with Variations

Date _____



ECAST products are intended for installation where state laws and local codes mandate lead content levels or in any location where lead content is a concern.

2100 South Clearwater Drive
Des Plaines, IL
P: 847/803-5000
F: 847/803-5454
Technical: 800/TEC-TRUE
www.chicagofaucets.com

332-L12ABCP

Glass and Pot Fillers

Architect/Engineer Specification

Chicago Faucets No. 332-L12ABCP, Sink Faucet, single-hole wall mount, chrome plated. L-Type swing spout, 12" center-to-center. 2.2 GPM (8.3 L/min) pressure compensating Softflo aerator. 2-3/8" metal, vandal-proof, lever handle with sixteen-point, tapered broach and secured, blue index button. Quaturn™ rebuildable compression cartridge, opens and closes 90°, closes with water pressure, features square, tapered stem. 1/2" NPT female thread inlet with integral wall flange. ECAST® construction with less than 0.25% lead content by weighted average. This product meets ADA ANSI/ICC A117.1 requirements and is tested and certified to industry standards: ASME A112.18.1/CSA B125.1, and Certified to NSF/ANSI 61, Section 9 by CSA.

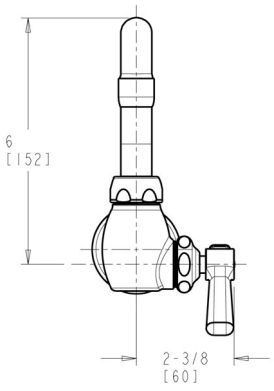

FRONT VIEW

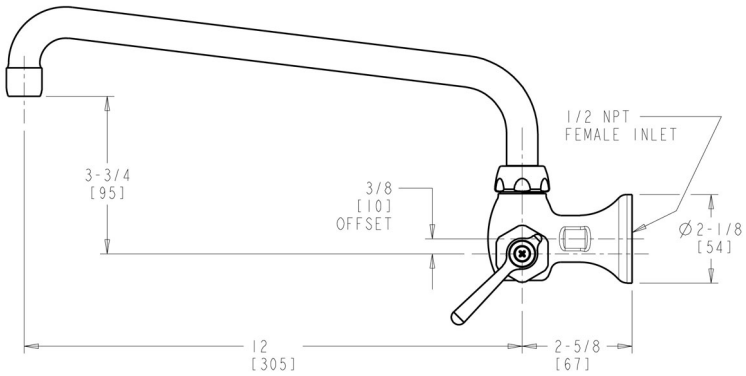

SIDE VIEW

Operation and Maintenance

Installation should be in accordance with local plumbing codes. Flush all pipes thoroughly before installation. After installation, remove spout outlet or flow control and flush faucet thoroughly to clear any debris. Care should be taken when cleaning the product. Do not use abrasive cleaners, chemicals or solvents as they can result in surface damage. Use mild soap and warm water for cleaning and protecting the life of Chicago Faucet products. For specific operation and maintenance refer to the installation instructions and repair parts documents that are located at www.chicagofaucets.com.

Chicago Faucets, member of the Geberit Group, is the leading brand of commercial faucets and fittings in the United States, offering a complete range of products for schools, laboratories, hospitals, office buildings, food service, airports and sport facilities. Call 1.800.TECTRUE or 1.847.803.5000 Option 1 for installation or other technical assistance.

2100 South Clearwater Drive
Des Plaines, IL
P: 847/803-5000
F: 847/803-5454
Technical: 800/TEC-TRUE
www.chicagofaucets.com