CHICAGO FAUCETS®
a Geberit company

2100 South Clearwater Drive
Des Plaines, IL 60018
Phone: 847-803-5000
Fax: 847-803-5454
www.chicagofaucets.com

FOR TECHNICAL ASSISTANCE
1-800-TEC-TRUE (1-800-832-8783)

REPAIR PARTS

BY: JAR	DATE: 01-29-14
CHK:	REV:

FITTING NO.
1100-L9VPAXKABCP
SUBMITTED MODEL NO.

ITEM NO.

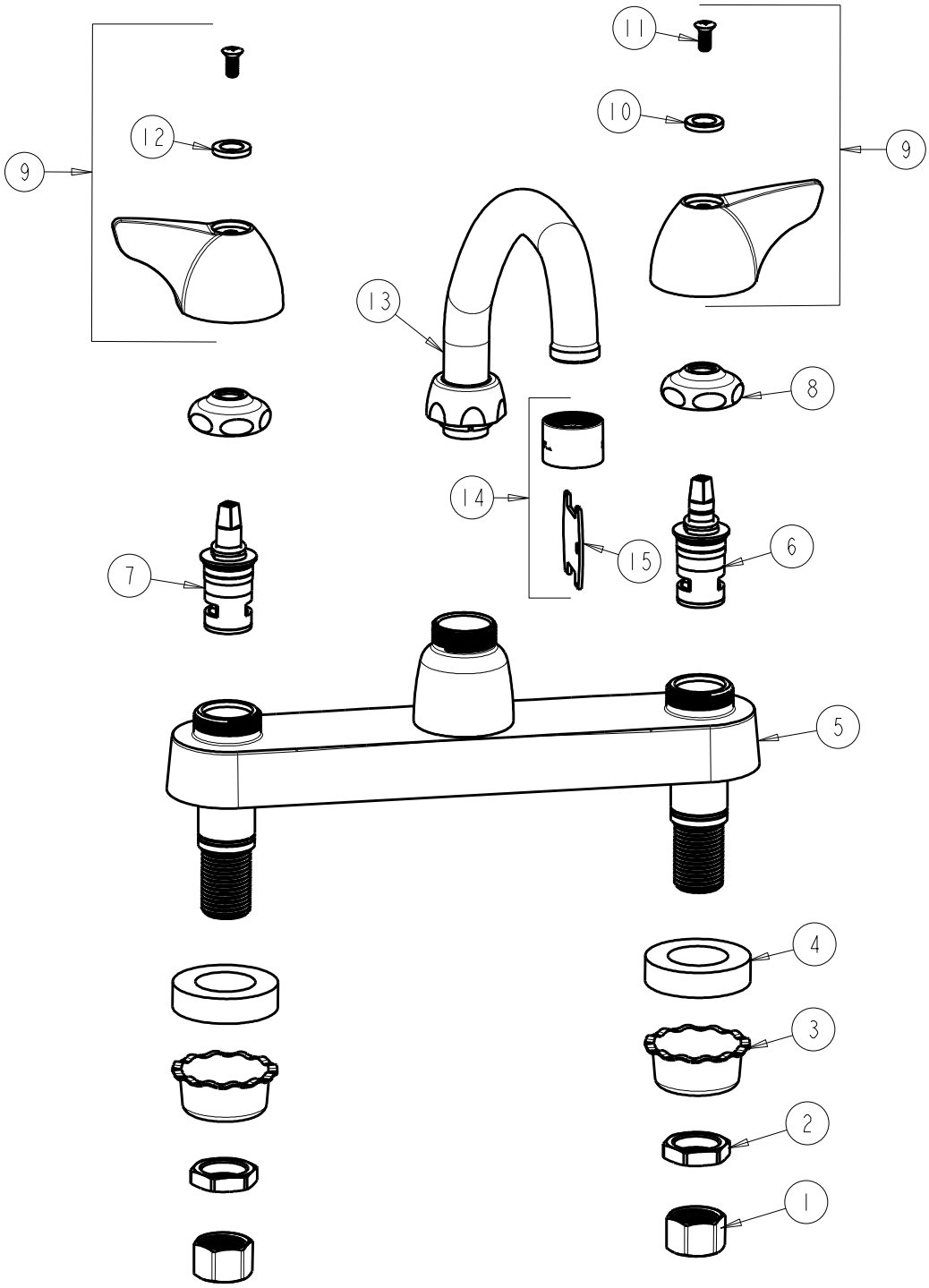

ITEM	PART NO.	DESCRIPTION	ITEM	PART NO.	DESCRIPTION
1	49-005JKRBF	COUPLING NUT	9	1000-PRJKCP	WING HANDLE ASSEMBLY (PAIR)
2	49-004JKRBF	LOCKNUT	10	633-123JKNF	INDEX BUTTON (BLUE)
3	1797-114JKNF	BASIN COCK WASHER	11	420-010JKRCF	SCREW, 10-32 UNC PH 1/2
4	555-313JKNF	WASHER	12	633-023JKNF	INDEX BUTTON (RED)
5	------	VALVE BODY (NOT SOLD SEPARATELY)	13	L9LEOJKAB	SPOUT, 9-1/2 C-C
6	1-099XKJKABNF	RH CERAMIC CARTRIDGE 1/4	14	E3VPJKABCP	OUTLET VP, AERATOR 2.2 GPM
7	1-100XKJKABNF	LH CERAMIC CARTRIDGE 1/4	15	3-024JKRCF	KEY, VP
8	1-214JKCP	CAP			