Touchless Faucets
EQ-A12B-21ABCP

Product Type

Touch-free faucet with plug-and-play installation

Features & Specifications

- 4" fixed centers
- EQ Curved electronic integral spout assembly
- Vandal Proof Pressure compensating Softflo aerator 1.0 GPM
- ECAST® design provides durable construction with total lead content equal to or less than 0.25% by weighted average
- Complies with the requirements of the Buy American Act of 1933.
- CFNow! Item Ships in 3 Days

Performance Specification

- Rated Operating Pressure: Operating static pressure: 20-125 PSI (138-862 kPa). Mixed water temperature range: up to 180°F (82°C). WARNING! Water temperatures in excess 110°F (43°C) are dangerous and may cause scalding, severe injury or death! This fitting is NOT factory preset and can deliver water at temperatures exceeding 110°F (43°C).

Warranty

- 3-Year Limited Electronics and Solenoid Warranty
- Lifetime Limited Faucet Warranty
- 1-Year Limited Finish Warranty
- 5-Year Limited Mechanical Warranty

Codes & Standards

- ADA ANSI/ICC A117.1
- NSF/ANSI 372 Low Lead Content
- ASME A112.18.1/CSA B125.1 NSF/ANSI 61, and NSF/ANSI 372
- Certified to NSF/ANSI 61, Section 9
- WARNING: This product can expose you to lead, which is known to the State of California to cause cancer and birth defects or other reproductive harm. For more information go to www.P65Warnings.ca.gov.

Job Name _____

Item Number _____

Section/Tag _____

Model Specified _____

Architect _____

Engineer _____

Contractor _____

[ ] Submitted as Shown [ ] Submitted with Variations

Date _____



ECAST products are intended for installation where state laws and local codes mandate lead content levels or in any location where lead content is a concern.

2100 South Clearwater Drive
Des Plaines, IL
P: 847/803-5000
F: 847/803-5454
Technical: 800/TEC-TRUE
www.chicagofaucets.com

EQ-A12B-21ABCP

Architect/Engineer Specification

Chicago Faucets No. EQ-A12B-21ABCP, EQ Curved Series Lavatory Sink Faucet with hands-free infrared detection, deck-mounted with 4" fixed centers. Chrome plated. 1.0 GPM (3.8 L/min) vandal-proof, pressure compensating, Softflo aerating outlet. Single supply for tempered water. Self Sustaining Power System (SSPS): water turbine generates the necessary power with flow rates 1.0 GPM (3.7 L/min) or greater to operate the faucet for 10+ years. Includes stainless steel braided hose(s). No mixer included. On-demand IR detection for hands-free actuation and maximum water savings. 20 seconds standard maximum run time; drops to 10 seconds in high use enviroments for additional water savings. ECAST® construction with less than 0.25% lead content by weighted average. This product meets ADA ANSI/ICC A117.1 requirements and is tested and certified to industry standards: ASME A112.18.1/CSA B125.1, Certified to NSF/ANSI 61, Section 9 by CSA, California Health and Safety Code 116875 (AB1953-2006), Vermont Bill S.152, and NSF/ANSI 372 Low Lead Content.

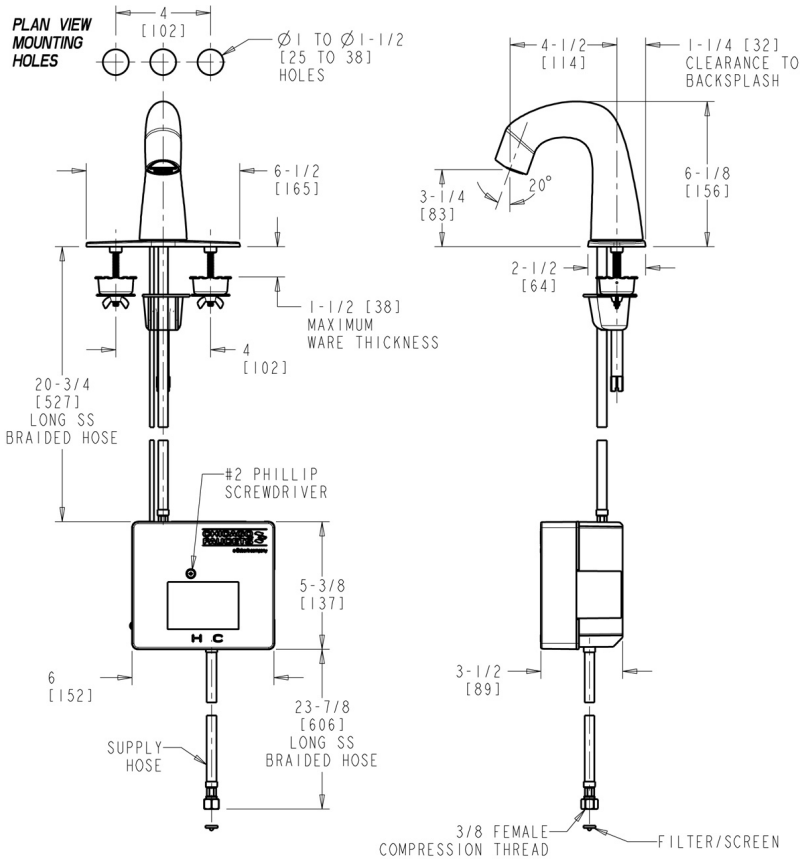

Operation and Maintenance

Installation should be in accordance with local plumbing codes. Flush all pipes thoroughly before installation. After installation, remove spout outlet or flow control and flush faucet thoroughly to clear any debris. Care should be taken when cleaning the product. Do not use abrasive cleaners, chemicals or solvents as they can result in surface damage. Use mild soap and warm water for cleaning and protecting the life of Chicago Faucet products. For specific operation and maintenance refer to the installation instructions and repair parts documents that are located at www.chicagofaucets.com.

Chicago Faucets, member of the Geberit Group, is the leading brand of commercial faucets and fittings in the United States, offering a complete range of products for schools, laboratories, hospitals, office buildings, food service, airports and sport facilities. Call 1.800.TECTRUE or 1.847.803.5000 Option 1 for installation or other technical assistance.

2100 South Clearwater Drive
Des Plaines, IL
P: 847/803-5000
F: 847/803-5454
Technical: 800/TEC-TRUE
www.chicagofaucets.com