CHICAGO FAUCETS®
a Geberit company

2100 South Clearwater Drive
Des Plaines, IL 60018
Phone: 847-803-5000
Fax: 847-803-5454
www.chicagofaucets.com

FOR TECHNICAL ASSISTANCE
1-800-TEC-TRUE (1-800-832-8783)

REPAIR PARTS

BY: SID	DATE: 06-12-12
CHK:	REV: 08-12-16

FITTING NO.
786-XKABCP
SUBMITTED MODEL NO.

ITEM NO.

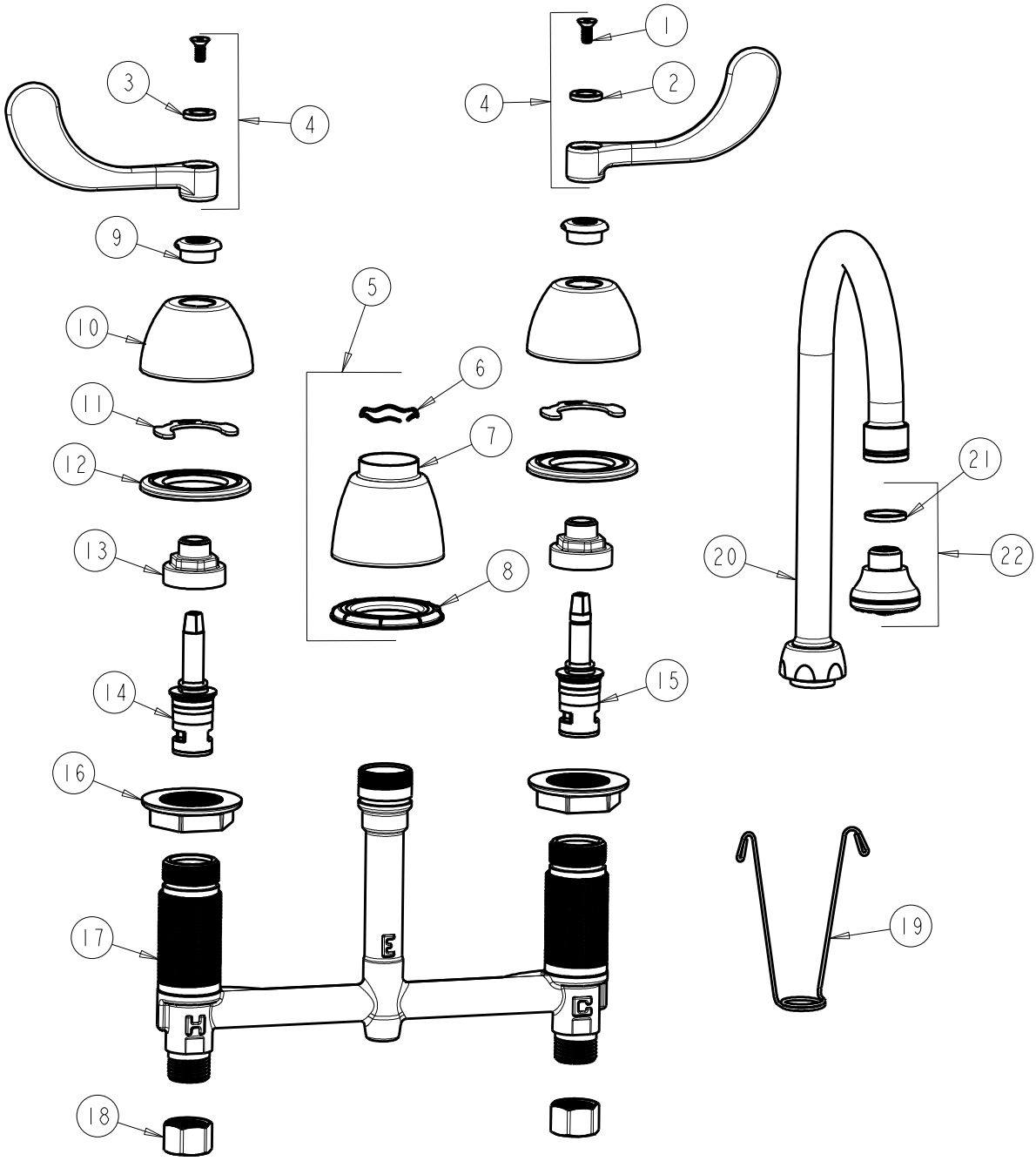

ITEM	PART NO.	DESCRIPTION	ITEM	PART NO.	DESCRIPTION
1	420-020JKNF	SCREW, 1/8 FLAT HEX HEAD X 1/2	12	888-026JKNF	WASHER, SEALING
2	633-123JKNF	INDEX BUTTON (BLUE)	13	274-014JKRBF	NUT, CAP
3	633-023JKNF	INDEX BUTTON (RED)	14	377-XKLHJKABNF	LH CERAMIC CARTRIDGE 1/4
4	317-PRJKCP	HANDLE, 4" WRISTBLADE (PAIR)	15	377-XKRHJKABNF	RH CERAMIC CARTRIDGE 1/4
5	785-400KJKCP	KIT, SPOUT ESCUTCHEON	16	250-004JKNF	LOCKNUT
6	50-038JKNF	WAVE WASHER	17	------	BODY, VALVE
7	785-400JKCP	ESCUTCHEON, SPOUT BASE	18	49-005JKRBF	COUPLING NUT
8	888-027JKNF	SPOUT ESCUTCHEON WASHER	19	200-008JKNF	HANGER
9	422-113JKCP	ESCUTCHEON NUT	20	GN2BJKABCP	SPOUT, GN B TYPE END 5-1/4" C-C
10	250-082JKCP	ESCUTCHEON	21	229-003JKABNF	WASHER
11	200-009JKNF	CLIP, RETAIN	22	E4JKABCP	OUTLET, ROSE SPRAY 1.5 GPM