CHICAGO FAUCETS®
a Geberit company

2100 South Clearwater Drive
Des Plaines, IL 60018
Phone: 847-803-5000
Fax: 847-803-5454
www.chicagofaucets.com

FOR TECHNICAL ASSISTANCE
1-800-TEC-TRUE (1-800-832-8783)

REPAIR PARTS

BY: SID	DATE: 09-25-14
CHK:	REV:

FITTING NO.
349-LESAB
SUBMITTED MODEL NO.

ITEM NO.

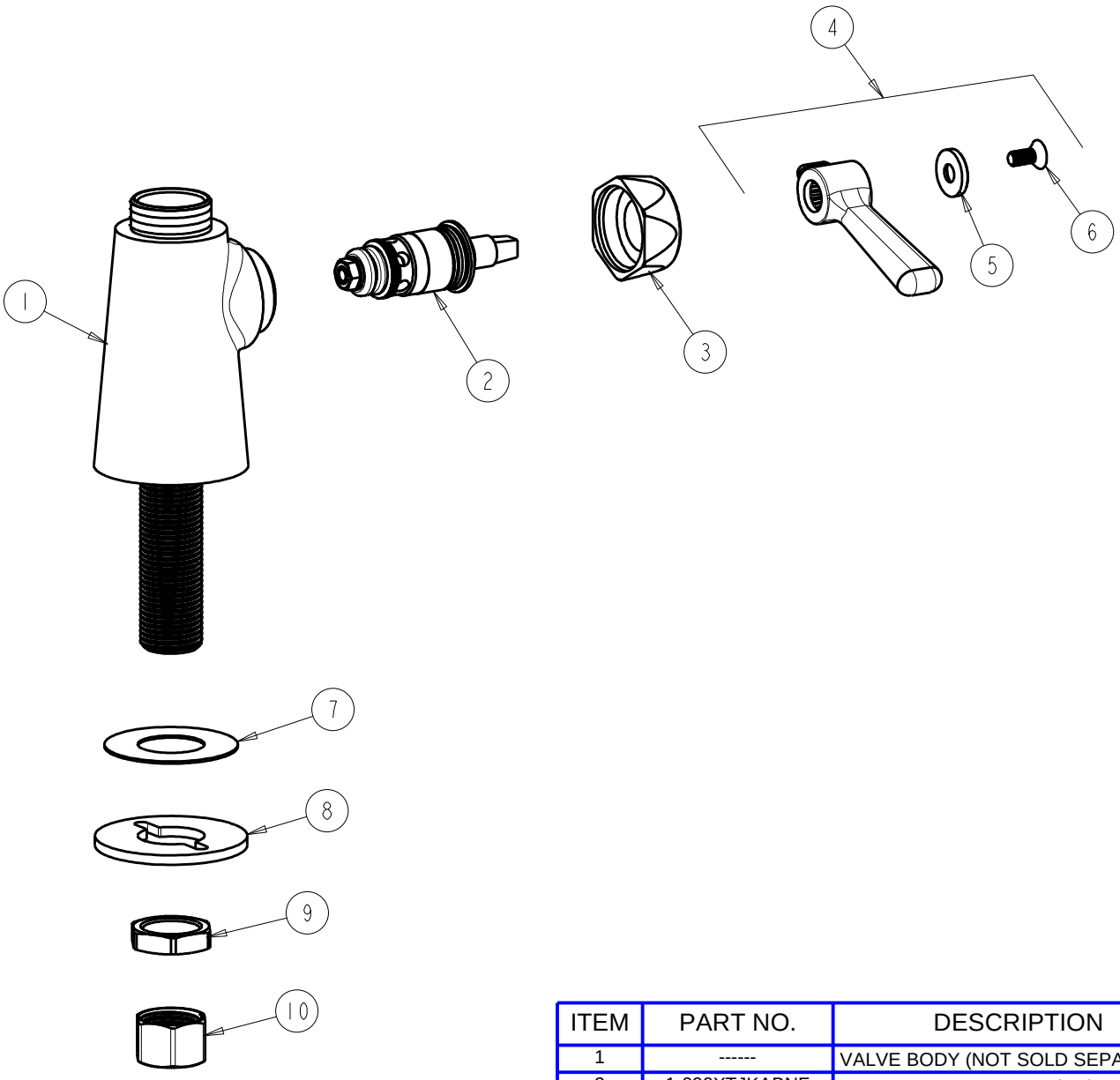

ITEM	PART NO.	DESCRIPTION
1	------	VALVE BODY (NOT SOLD SEPARATELY)
2	1-099XTJKABNF	QUATURN CARTRIDGE (RH)
3	444-005JKCP	CAP
4	369-COLDJKCP	LEVER HANDLE ASSEMBLY
5	633-123JKNF	INDEX BUTTON (BLUE)
6	420-020JKNF	SCREW, 1/8 FLAT HEX HEAD X 1/2
7	333-103JKNF	RUBBER WASHER
8	807-112JKNF	WASHER
9	49-004JKRBF	LOCKNUT
10	49-005JKRBF	COUPLING NUT