ELECTRONIC-DC FAUCETS

EQ-A11A-13ABCP

Electronic Sensor Faucets

Product Type

Deck Mounted Single Hole EQ Curved Series Lavatory Sink Faucet with Hands-free Infrared Detection

Features & Specifications

- Single Hole
- 0.5 GPM (1.9 L/min) Vandal Proof Non-Aerating Spray
- Dual Supply for Hot and Cold Water Service
- Powered from 4 "AA" Alkaline Batteries (Included) - Up to 5 Year Battery Life
- Stainless Steel Braided Hose(s) (Included)
- Concealed Thermostatic Mixing Valve (Included)
- On Demand IR detection for hands-free actuation and maximum water savings
- 20 seconds standard maximum run time; drops to 10 seconds in high use environments for additional water savings
- ECAST® design provides durable construction with total lead content equal to or less than 0.25% by weighted average
- CFNow! Item Ships in 3 Days

Performance Specification

- Operating static pressure: 20-125 PSI (138-862 kPa). Minimum static pressure for mixing 30 PSI (207 kPa). Cold water inlet temperature range: 39-80°F (4-27°C). Hot water inlet temperature range: 100-180°F (38-82°C). Mixed water temperature range: 80-120°F (27-49°C). Adjustable temperature control. Accurate within +/- 3°F (1.7°C). Minimum flow rate for proper functioning of thermostatic protection: 0.35 GPM (1.3 LPM). Maximum pressure differential between hot and cold water supplies: 20%. Minimum inlet water supply temperature differential: 20°F (9°C). Integral check valves for cross-flow protection. WARNING! Water temperatures in excess 110°F (43°C) are dangerous and may cause scalding, severe injury or death! This fitting is NOT factory preset and can be adjusted to deliver water at temperatures exceeding 110°F (43°C).

Warranty

- Lifetime Limited Faucet Warranty
- 1-Year Limited Finish Warranty
- 5-Year Limited Mechanical Warranty
- 3-Year Limited Electronics and Solenoid Warranty

Codes & Standards

- ASME A112.18.1/CSA B125.1
- Certified to NSF/ANSI 61, Section 9 by CSA
- California Health and Safety Code 116875 (AB1953-2006)
- Vermont Bill S.152
- NSF/ANSI 372 Low Lead Content
- ADA ANSI/ICC A117.1
- CALGreen
- Certified to ASSE 1070 by CSA

Job Name _____

Item Number _____

Section/Tag _____

Model Specified _____

Architect _____

Engineer _____

Contractor _____

[ ] Submitted as Shown [ ] Submitted with Variations

Date _____



ECAST

ECAST products are intended for installation where state laws and local codes mandate lead content levels or in any location where lead content is a concern.

2100 South Clearwater Drive
Des Plaines, IL
P: 847/803-5000
F: 847/803-5454
Technical: 800/TEC-TRUE
www.chicagofaucets.com

EQ-A11A-13ABCP

Electronic Sensor Faucets

Architect/Engineer Specification

Chicago Faucets No. EQ-A11A-13ABCP, EQ Curved Series Lavatory Sink Faucet with hands-free infrared detection, single-hole deck mount. Chrome plated. 0.5 GPM (1.9 L/min) vandal-proof, pressure compensating, Econo-Flo non-aerating spray outlet. Dual supply for hot and cold water service. Powered by 4 "AA" alkaline batteries (included) - up to 5-year battery life. Includes stainless steel braided hose(s). Includes concealed thermostatic mixing valve. On-demand IR detection for hands-free actuation and maximum water savings. 20 seconds standard maximum run time; drops to 10 seconds in high use enviroments for additional water savings. ECASTï¿½® construction with less than 0.25% lead content by weighted average. CALGreen compliant. This product meets ADA ANSI/ICC A117.1 requirements and is tested and certified to industry standards: ASME A112.18.1/CSA B125.1, Certified to NSF/ANSI 61, Section 9 by CSA, ASSE 1070, California Health and Safety Code 116875 (AB1953-2006), Vermont Bill S.152, NSF/ANSI 372 Low Lead Content, and California Green Building Standards Code (CALGreen).

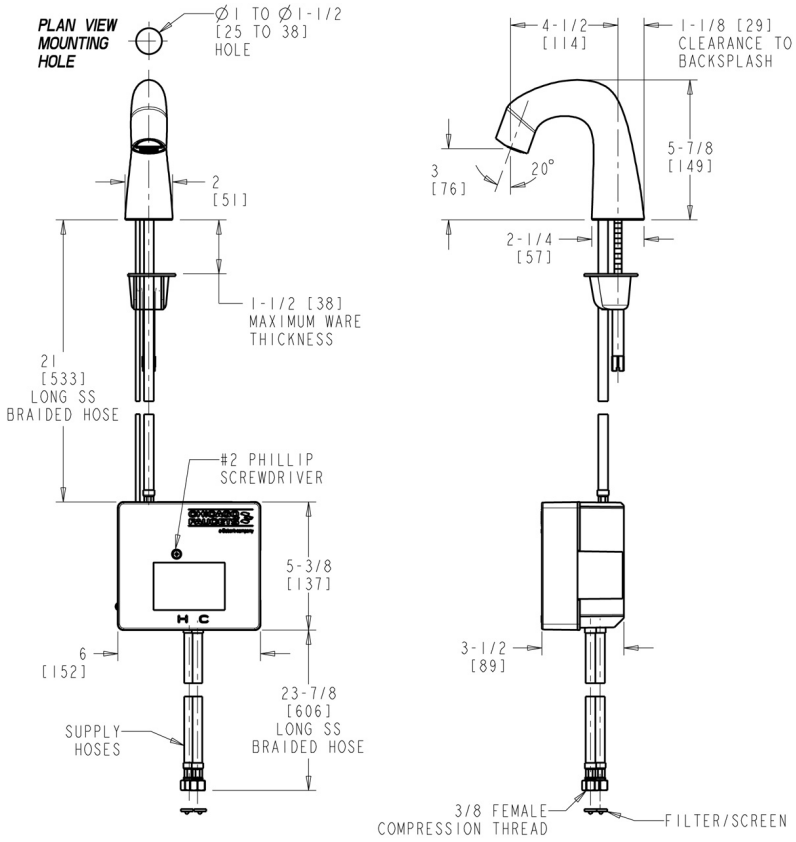

Operation and Maintenance

Installation should be in accordance with local plumbing codes. Flush all pipes thoroughly before installation. After installation, remove spout outlet or flow control and flush faucet thoroughly to clear any debris. Care should be taken when cleaning the product. Do not use abrasive cleaners, chemicals or solvents as they can result in surface damage. Use mild soap and warm water for cleaning and protecting the life of Chicago Faucet products. For specific operation and maintenance refer to the installation instructions and repair parts documents that are located at www.chicagofaucets.com.

Chicago Faucets, member of the Geberit Group, is the leading brand of commercial faucets and fittings in the United States, offering a complete range of products for schools, laboratories, hospitals, office buildings, food service, airports and sport facilities. Call 1.800.TECTRUE or 1.847.803.5000 Option 1 for installation or other technical assistance.

2100 South Clearwater Drive
Des Plaines, IL
P: 847/803-5000
F: 847/803-5454
Technical: 800/TEC-TRUE
www.chicagofaucets.com