ROUGHING IN DIMENSIONS MAY VARY AND ARE SUBJECT TO CHANGE. NO RESPONSIBILITY IS ASSUMED FOR USE OF SUPERCEDED OR VOIDED DATA.

CHICAGO FAUCETS
a Geberit company

2100 South Clearwater Drive
Des Plaines, IL 60018
Phone: 847-803-5000
Fax: 847-803-5454
www.chicagofaucets.com

FOR TECHNICAL ASSISTANCE
1-800-TEC-TRUE (1-800-832-8783)

ROUGH-IN

FITTING NO.
510-216548AB

BY: SID | DATE: 06-22-17 | SUBMITTED MODEL NO.

CHK: JAR | REV:

SUBMITTED AS SHOWN		SUBMITTED AS NOTED		SEE ATTACHED FOR SUBMITTED MODIFICATION	

JOB NAME | ITEM NO.

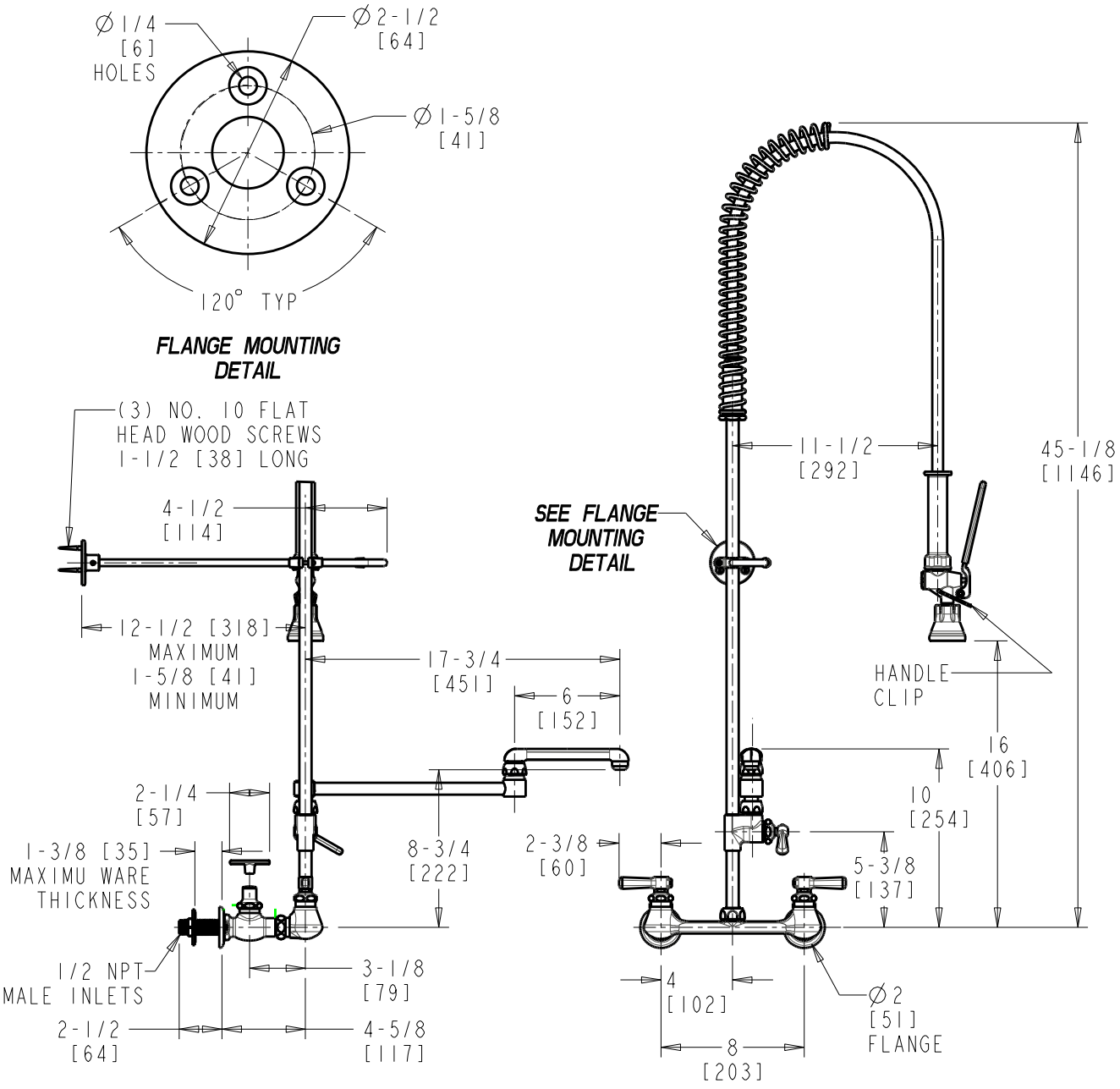

DIMENSIONS ARE IN INCHES AND [MILLIMETERS].

TECHNICAL DATA

- WALL MOUNTED PRE-RINSE SPRAY
- 613-A ADAPTA FAUCET W/ DJ18E1 SPOUT AND 241 LEVER HANDLES
- 369 INDEXED LEVER HANDLES
- QUATURN OPERATING CARTRIDGES
- 90-HAB HOSE REEL PRE-RINSE SPRAY VALVE
- 2.5 GPM [9.5 L/min.] MAXIMUM FLOW RATE
- FINISH: CHROME PLATE
- 'EC' 1/2" FLANGED SHANKS WITH INTEGRAL CHECK
- 44" STAINLESS STEEL HOSE
- 23" RISER WITH PIPE SUPPORT & HOOK ASSEMBLY
- 932-001K INLET SHANK ASSEMBLY
- ASME A112.18.1/CSA B125.1 COMPLIANT
- COMPLIANT TO NSF/ANSI 61, SECTION 9
- MEETS THE LEAD CONTENT REQUIREMENTS OF: CALIFORNIA, VERMONT AND NSF/ANSI 372